Clima-Flex®
Air Conditioning
a member of DAIKIN group

Control Manual

CM

Group: Wall Mounted
Part Number: CLIWP CM
Date: May 20th, 2024

CLIWP Series
Direct Expansion Unit with Scroll Compressor

Model

3 RT / 5 RT

Refrigerant R410A

60 Hz

CONTENT

NOMENCLATURE

CLIWP-036-AC-F-F-Y-Y-R-1-U-T-M-C-A-Y-Y-1-Y-G-X-4-Y-S-Y-Y-Y-Y

CLIWP - Wall-Packaged Unit

NOMINAL CAPACITY
036 - 36,000 Btu/h nominal cooling
060 - 60,000 Btu/h nominal cooling

OPERATING
AC - Air Conditioner

COMPRESSOR
F - Fixed Speed - Single Stage

VOLTAGE
E - 208-230 / 1 /60
F - 208-230 / 3 / 60
K - 460 /3 /60

DEHUMIDIFICATION
Y - None

ELECTRIC HEAT
1 - 5 Kw
2 - 10 Kw
Y - None

COMPRESSOR SIDE
R - Right

DESIGN SERIES
1 - Design series 1

DISCHARGE AIR
U - Upper

CONTROL OPTIONS
T - Thermostatic
L - Digital Controller
A - Low ambient Control

CONDENSER COIL
M - Al-Al Microchannel

EVAPORATOR FAN MOTOR
C - AC Fixed

CONDENSER FAN MOTOR
A - Axial Standard

EXTENDED WARRANTY
Y - None

PLACE HOLDER
Y - None

PLACE HOLDER
Y - None

THERMOSTAT 24V
Y - None
T - Included

PACKAGING
S - Standard / Botton Crate
C - International / Full Crate

IAQ Options
Y - None

REFRIGERANT
4 - R410-A

VENTILATION PACKAGES
X - Fresh air Damper
D - Economizer 0-10V Temperature control (Digital Controller)

COLOR
G - Gray

SUPPLY & RETURN GRILLS
1 - Single Deflection (Horizontal)
Y - None

FILTERS
1 - Disposable Fiber Glass
2 - Disposable 1” MERV 8
3 - Disposable 2” MERV 8
4 - Disposable 1“ MERV11
5 - Disposable 2” MERV 11
6 - Disposable 1“ MERV 13
7 - Disposable 2” MERV 13

UNIT COATING
Y - None

COIL COATING
E - E-Coat Condenser & Evaporator Coil
D - E-Coat Condenser Only
F - E-Coat Evaporator Only
Y - None

⚠ WARNING ⚠

Electric shock danger.

Improper handling of this equipment can cause personal injury or equipment damage. This equipment must be properly grounded.

Control panel connections and maintenance should be performed only by personnel knowledgeable in the operation of the equipment being controlled.

Disconnect electrical power before servicing equipment. Be sure to install a earth leakage circuit breaker.

Failure to install a earth leakage breaker may result in electric shock or fire.

⚠ CAUTION ⚠

Static sensitive components.

Static discharge during handling of the electronic circuit board can cause damage to components.

Use a static strap before performing any service work.

Never unplug any cables, circuit board terminal blocks, or power plugs while power is applied to the panel.

⚠ CAUTION ⚠

When moving refrigerant to/from the cooler using an auxiliary tank, a grounding strap should be used.

An electrical charge builds up when halo-carbon refrigerant travels in a rubber hose.

A grounding strap should be used between the auxiliary refrigerant tank and the cooler end sheet (ground to ground), which will safely carry the charge to ground.

Failure to follow this procedure may result in damage to sensitive electronic components.

⚠ WARNING ⚠

If refrigerant leaks from the unit, there is a potential choking danger as the refrigerant will displace air in the immediate area.

Be sure to follow all applicable published industry-related standards and local, state, and federal statutes, regulations, and codes if refrigerant is produced.

Avoid exposing refrigerant to an open flame or other ignition source.

⚠ WARNING ⚠

Polyolester oil, commonly referred to as POE oil, is a synthetic oil used in many refrigeration systems and may be present in this Clima Flex product.

POE oil, if it ever comes in contact with PCV/CPVC, will coat the inside wall of the PVC/CPVC pipe and cause environmental stress fractures.

Although there is no PCV/CPCV pipe in this product, keep this in mind when selecting piping materials for your application, as system failure and property damage could occur.

Consult the pipe manufacturer's recommendations to determine appropriate pipe applications.

⚠ WARNING ⚠

This appliance is not intended for use by persons (including children) with reduced physical, sensory or mental capabilities, or lack of experience and knowledge, unless they have been given supervision or instruction concerning use of the appliance by a person responsible for their safety.

⚠ WARNING ⚠

Children should be supervised to ensure that they do not play with the appliance.

⚠ WARNING ⚠

For appliances intended for use at altitudes exceeding 2 000 m, the maximum altitude of use shall be stated.

ANSI Z535.5 DEFINITIONS:

⚠ DANGER ⚠

Indicate[s] a hazardous situation which, if not avoided, will result in death or serious injury. The signal word “DANGER” is to be limited to the most extreme situations. DANGER [signs] should not be used for property damage hazards unless personal injury risk appropriate to these levels is also involved.

⚠ WARNING ⚠

Indicate[s] a hazardous situation which,if not avoided, could result in death or serious injury. WARNING [signs] should not be used for property damage hazards unless personal injury risk appropriate to this level is also involved.

⚠ CAUTION ⚠

Indicate[s] a hazardous situation which, if not avoided, could result in minor or moderate injury. CAUTION [signs] without a safety alert symbol may be used to alert against unsafe practices that can result in property damage only.

NOTE: Installation and maintenance should be performed only by qualified personnel who are familiar with local codes and regulations and who have experience with this type of equipment.

⚠ DANGER ⚠

LOCK OUT/LABEL all power sources before starting, pressurizing, depressurizing or shutting down the equipment.

Disconnect electrical power before servicing equipment.

More than one disconnection may be required to deenergize the unit.

Failure to follow this warning to the letter can result in serious injury or death. Be sure to read and understand the installation, operating and service instructions in this manual.

The LIOB-585 I/O controllers are compact, IP-enabled, programmable automation stations designed for LonMark systems and BACnet/IP networks, featuring physical inputs and outputs and an integrated graphical display (Figure 1).

Figure 1. LIOB-585 controller front view.

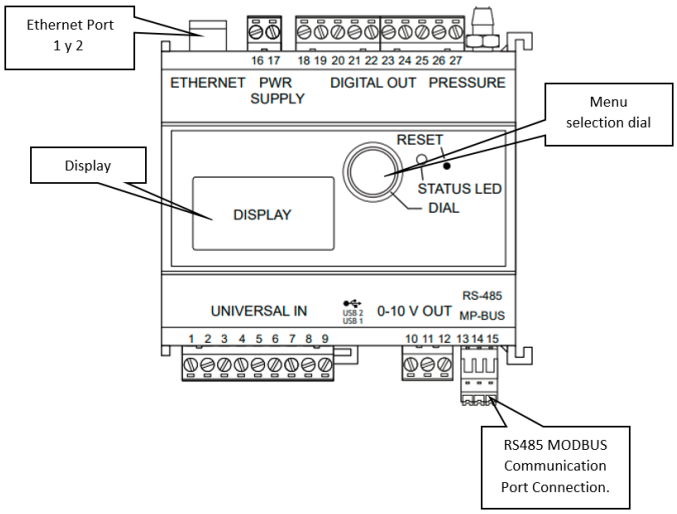

USE AND OPERATION OF THE HARDWARE INTERFACE

Dial

This dial is intended for navigating the screen and selecting the requisite menus to configure the LIOB-585. Primarily, the dial operates by rotating the knob in either direction. Furthermore, the dial serves as an ENTER key pressing on the knob, facilitating access to the desired menu.

Menu selection pointer dial.

Figure 2. LIOB-585 main screen.

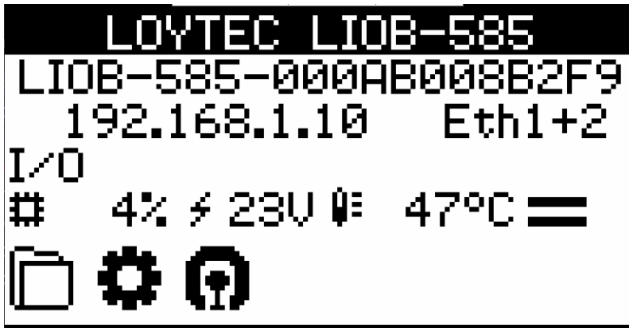

The main interface of the LIOB-585 controller displays the current status of the controller, which may include the serial number of the controller, the current communication configuration, percentage of memory usage, and the current internal voltage of the controller (See Figure 2).

The LIOB-585 controller features a “power-saving” function that may appear inactive or turned off. The display light reactivates upon pressing or moving the selection dial.

On the controller interface, menus and options are displayed with a black box indicating the selection pointer. The selection pointer is activated by rotating the dial from right to left, moving it vertically from top to bottom, respectively. To choose the desired option or menu, the selection dial must be pressed.

Dial ENTER key.

Figure 3. Controller and dial front view.

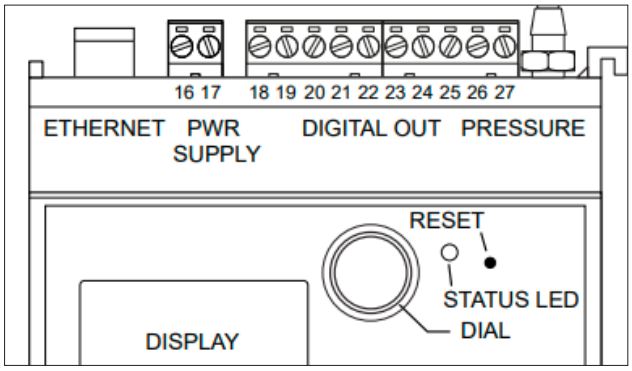

Once you have selected the desired menu on the display, press the dial to access it (Figure 3).

Return to main menu.

Figure 4. Device settings menu.

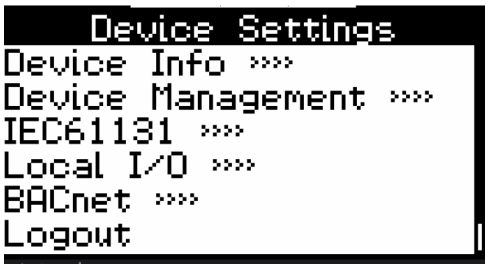

To access the main menu display, from any menu, sub-menu, or folder where the pointer is located, rotate left until reaching the first option on the display. This option will be named as the menu, sub-menu, folder, or immediate option prior to the current location. Once the pointer is placed, it must be pressed to return to the previous menu, and this process repeats successively until reaching the main menu.

RS485 Connection Port

For the installation of the RS485 connector, observe the connection labels, marked as GND, (+), and (-). When wiring the MODBUS connection, observe the connector from the front to place the wiring on the top of the connector.

Figure 5. RS-485 connection port.

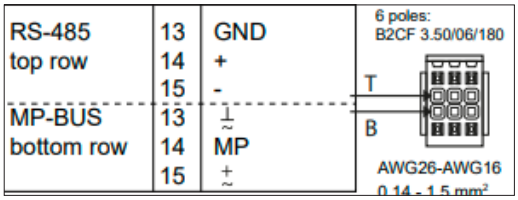

⚠ WARNING ⚠

Ensure to adhere the labeling when making connections, as connecting to port B or (MP) may result in permanent damage to components, as this port carries 24 VDC.

⚠ WARNING ⚠

The installation and configuration of this device must always be performed by trained personnel, otherwise it may result in permanent damage to the equipment.

Status Led

The status LED serves the purpose of indicating the current operational status of the controller. This is achieved through two color-coded signals identified as:

1. Green color: This LED indicates that the controller is in a healthy state according to the correct settings programmed.

2. Red color: This signal indicates a warning of a potential failure in the operation configuration. Such failure may be due to hardware malfunction or operation configuration and should be reviewed in the controller interface.

Reset

This option serves the purpose of deleting the current configuration of the controller. This operation must be performed directly on the controller hardware by locating the “reset” button, on the front panel. To activate it, it is necessary to press with a slender object during 3 seconds.This action will result in the loss of data and the loss of communication settings of the controller.

QUICK MENU

In the main interface of the controller, at the bottom, are the “quick menus.” To navigate through these menus use the selection dial, and press to select.
In some sub-menus or editable options, you turn the selection dial to increase or decrease the required value, then press again to exit editable selection.

Datapoints

The Datapoints icon (🗀) allows navigating through the pre-saved data folders on the device.

Device Settings

The device settings icon (⚙) allows configuring the basic settings of the device management submenu (Figure 4 and 6) as server configurations, storage, license status, etc.

Figure 6. Device settings.

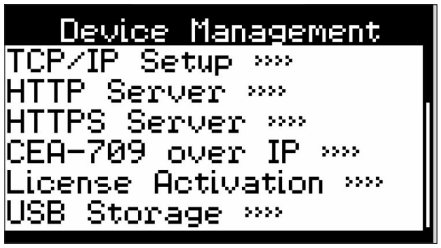

Addressing Wall-Mount

To configure the IP address:

1. Navigate to the IP address on the main screen and press the dial button to select, (See Figure 7).

Figure 7. LIOB-550 Main screen.

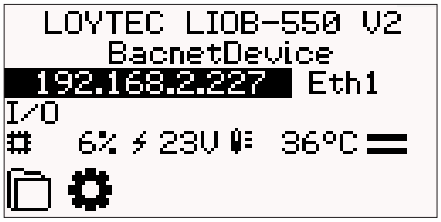

2. Navigate to the necessary input fields, press to access, and modify the value. Press again to confirm. Proceed to the next field.
3. Finally, navigate to Save and Restart and press.

Figure 8. Setting IP address.

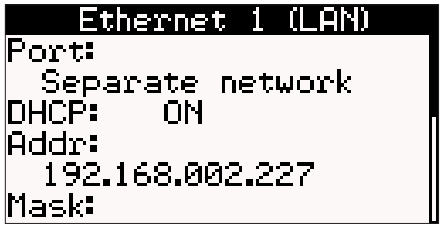

4. Confirm the restart, and the device will reboot with the new IP address.

Status Led

The meaning of the LED signals for the LIOB-58x/59x models is shown in Table 1.

Table 1. Status led.

Behavior	Description	Comment
Shutdown	No traffic	No packets are received or transmitted.
Blinking GREEN	Traffic	L-IOB device is receiving or transmitting packets.
ORANGE	Manual Mode	At least one I/O is in manual mode.
RED	Error	An error has occurred (e.g. a sensor is disconnected).
Red flashing at 0.5 Hz and "LIOB Fallback" displayed on LCD interface	Cancellation of the reservation	The primary program image is corrupted and the L-IOB has started the backup image. In this case, the program must be updated again.

CONTROL OPERATION

Communication

The LIOB-585 I/O Controller is equipped with two Ethernet ports, including one integrated Ethernet. Offering the possibility of configuring a redundant Ethernet installation, thereby augmenting system reliability through a ring topology configuration.

The implementation of a redundant Ethernet topology is facilitated by the Rapid Spanning Tree Protocol (RSTP), a feature compatible with the majority of managed switches. Allowing the capability to construct a daisy chain topology of up to 20 devices.

The data points are made accessible as OPC tags for advanced OPC client applications or the L-WEB system through the integrated OPC server. This server offers SSL-encrypted web services (OPC XML-DA) or secure UA conversation (OPC UA) for enhanced security and interoperability.

The L-IOB I/O controllers facilitate data exchange through global connections, enabling network-wide data exchange. Additionally, they provide AST™ functionalities (Alarm, Scheduling, and Trends), store customized graphic pages for display on LWEB-802/803, and seamlessly integrate into the LWEB-900 building management system. Furthermore, the LIOB-585 I/O controllers implement the BACnet Building Controller profile (B-BC) and hold BTL certification.

IoT Integration

The IoT function (Node.js) enables the system to establish connections with a wide range of cloud services, facilitating tasks such as uploading historical data to analytics services, sending alarm messages to alarm processing services, or managing aspects of the control system via a cloud service (e.g., calendar-based scheduling or reservation systems).

Additionally, the system can process Internet data, such as weather forecasts, to support forecast-based control strategies. Furthermore, the JavaScript core allows for the implementation of serial protocols to interface with non-standard equipment in the primary plant control system.

Hardware

An LIOB-58x I/O controller is linked to a BACnet network via the Ethernet/IP port of the L-IOB device. To power the device, an LPOW-2415A power supply, for instance, should be utilized.

BACnet Start Up

For LIOB-58x models, the initial IP and BACnet configuration is necessary and can be accomplished through either the LCD user interface or the web user interface. In the LCD interface of LIOB-48x/58x models, the display showcases the IP address and Ethernet status rather than the PLC status.

The menu presents various options for basic device configuration: See table 2.

Table 2. Basic device configuration.

TCP/IP Configuration (LIOB-48x/58x)	IP configuration page (IP address, etc,).
Send Identification Messages	Send a service pin message (LIOB-18xx/48x) or an I-AM message (LIOB-58x)
Restart System	By selecting this option, the device initiates a hard reset.
Delete DP Configuration	By selecting this item, the user can clear the entire data point configuration of the device. This action removes all configured data points.
Factory Settings	By selecting this option, the user reset the entire device to its factory defaults restoring to its original settings
PIN	This feature enables the user to change the default PIN to any 4-digit number, enhancing security for specific operations conducted via the LCD user interface. Upon accessing protected areas, the user will be prompted to enter the customized PIN to proceed with the operation.
Contrast	To adjust the display contrast.
Language	Change the LCD language. **NOTE: That this requires a restart of the device.**
Reset I/O counters	To reset all I/O counters, including pulse count values.

BACnet/IP CONFIGURATION

1. Access the LOYTEC web page configuration. Upon entry, the system will request the following information (See Figure 9):

   User: admin
   Password: loytec4u

Figure 9. User login.

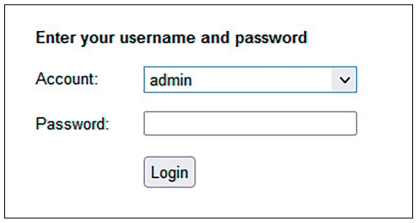

2. After completing this process, you will gain access to the control configuration portal (See Figure 10).

Figure 10. Control configuration portal interface.

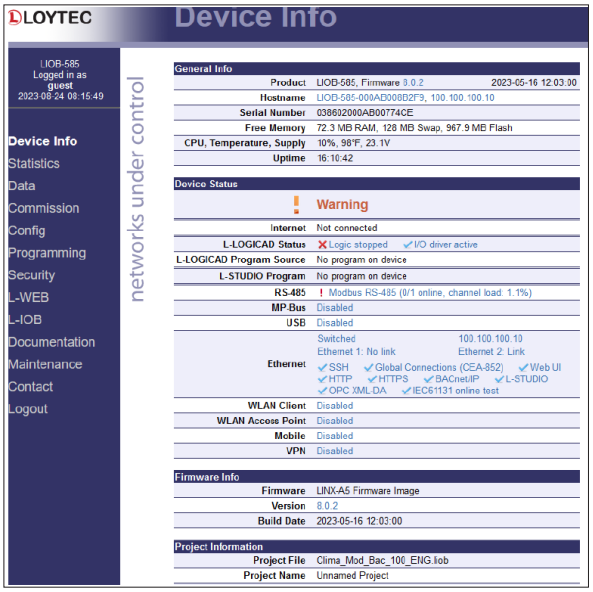

3. Navigate to the “Config” menu and select the BACnet configuration option (See Figure 11).

Figure 11. “Config” menu screen.

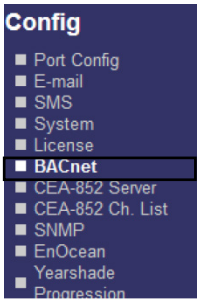

4. The subsequent screen will appear, displaying the configuration data (See Figure 12).

Figure 12. Configuration settings.

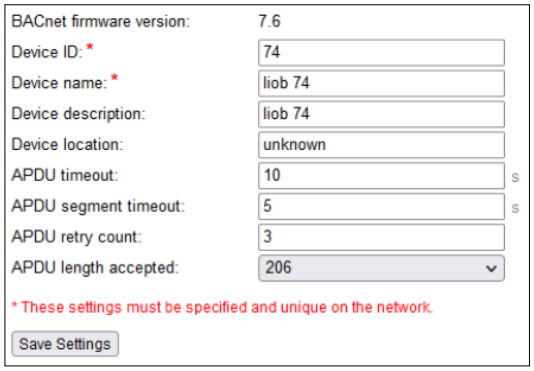

See Table 3 for the configurable options of each setting.

Table 3. Configuration settings.

Option	Description
Device ID	This feature enables device enumeration based on its location within the BACnet network.
Device Name	This functionality enables you to assign a name to the device for easier identification within the network.
Device Description	This feature allows you to input a brief description of the device in terms of its communication function
Device Location	This functionality enables you to provide a brief description of the device's location in terms of its communication function
Advanced communication options APDU timeout APDU segment timeout APDU retry count APDU length accepted	These systems are designed to allow modification of the data frame to suit the customer's requirements. By default, the frame is configured with shorter lengths based on the customer's communication needs. These options are customizable according to the customer's specific requirements, each affecting the BACnet communication frame differently.

5. After configuring the control, press “Save Configuration”.
6. Finally, the message “Configuration saved successfully” will appear on your screen.

Configuration for communication port

1. From the Config menu, choose the Port Config configuration type.
2. Please proceed to the Ethernet 1 (LAN) tab, see Figure 13 for detail of options portal. This allows you to configure the IP address settings to facilitate bidirectional communication.

Figure 13. Port configuration screen. Ethernet 1 (LAN) configuration.

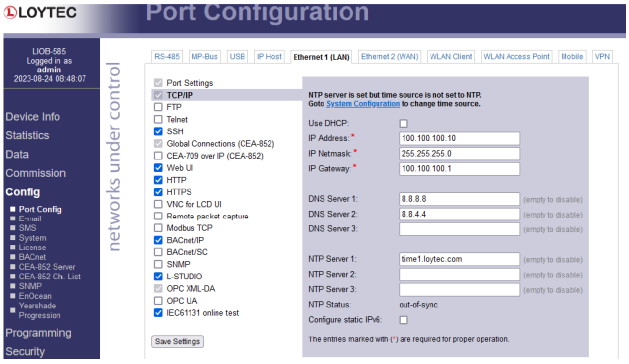

The IP address by default is available and able to modify to the client configuration preferences. Ensure that this configuration is suitable for the network connection, as it will depend on the internal network setting where the BACnet communication installation will be implemented.

After configuring the IP address, proceed to select the BACnet IP option from the menu to access the following configuration. See Figure 14.

Figure 14. BACnet configuration settings.

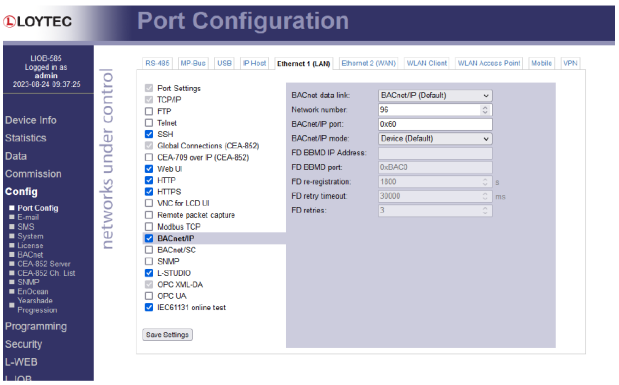

See Table 4 for the options provided by this configuration.

Table 4. BACnet settings.

Option	Description
BACnet data link	It provides the capability to configure the frame type for IP BACnet communication. This selection will depend on the installation's wiring requirements, allowing for a choice between IPV4 or IPV6 communication types based on the specific application needs.
Network number	It allows for the selection of the device address number, enabling the choice of the suitable address based on the installation where the BACnet communication will be implemented.
BACnet/IP port	Enables the selection of the port for device communication. This option depends on the client's internal network configuration. To mitigate any address conflict issues arising from the number of devices connected to the network, the port can be freely chosen.

Wallpack(Loytec Control) VS Condenser + Economizer

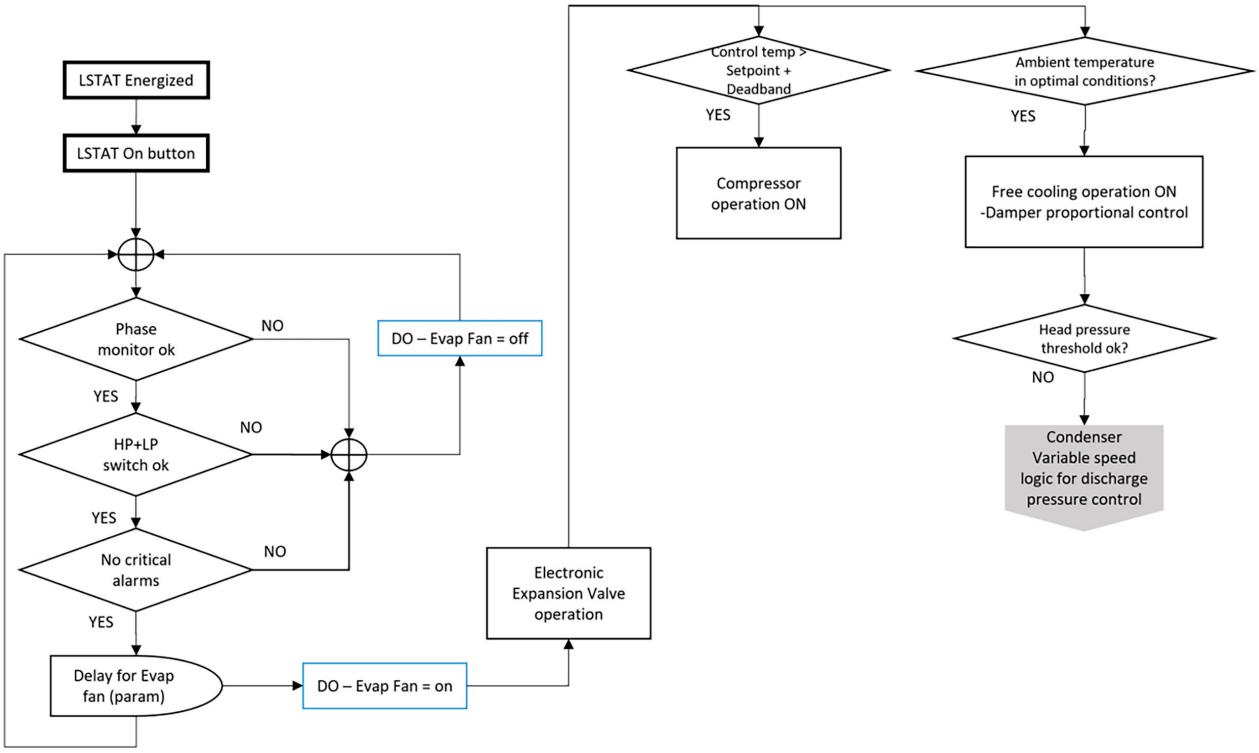

Características:

- Control Exv
- Control Low Ambient
- Control de Economizador

Protección:

INTERRUPTORES DE PRESIÓN			
	Presión de Activación Superior [bar]	Pressión de Activación Inferior [bar]	Reinicio Automático
HP (061F7517)	42.00	33.00	STST (NC)
LP (061F6107)	6.00	4.00	SPST (NO)

NOTA: El controlador gestionará los temporizadores cuando se encuentre en condiciones de alarma para proteger el compresor y evitar que funcione en condiciones fuera de rango.

NOTICE

IMPORTANT: THIS CONFIGURATION IS OPTIONAL, ONLY IF THE CUSTOMER REQUIRES IT AND IF IT IS APPLICABLE TO THE MODEL HE HAS IN THE FIELD.

Table 5. Loytec Inputs And Outputs

NAME	NOMENCLATURE	SENSOR TYPE	I/O PHYSICS	AI	DI	AO	DO (TRIAC	SPD (500 Pa)
High And Low Pressure	HPS/LPS	N.O. Switch	UI-1		1			
High Pressure Transducer	HPT	Transducer	UI-2	1				
Outdoor Temp.	TEx	Thermistor 10KM II	UI-3	1				
Return Temp.	RT	Thermistor 10KM II	UI-4	1				
Injection Temp.	TI	Thermistor 10KM II	UI-5	1				
Motor Saver	MS	N.O. Switch	UI-6		1			
AP Vent. Condenser	Apv	Relay 24 VAC	DO-1				1	
AP Evaporator	Apc	Relay 24 VAC	DO-2				1	
AP Compressor	APdx	24 VAC Relay	DO-3				1	
AC Free Cooling	ACf	0-10 VDC	AO-1			1		
Zone Temp.	TZ			LSTAT (MODBUS RTU)				
Total points per Ctrl				**3**	**3**	**1**	**3**	**0**

Figure 15. Steps to conect LIOB.585 devices for BACnte/IP to MS/TP or Modbus RS485 conversion

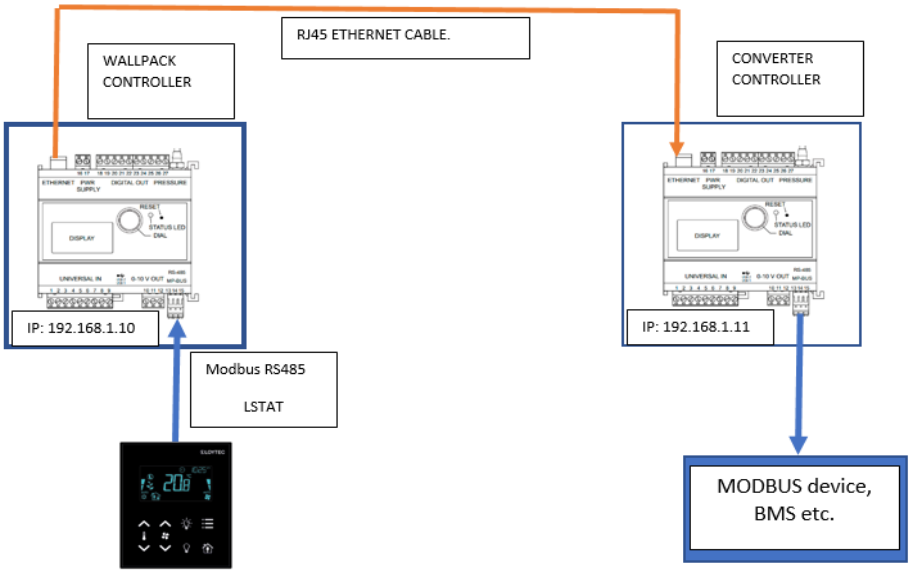

IP address configuration of the LIOB-585 controller

To ensure effective communication with the MODBUS converter, it is essential to configure the controller's IP address so that the two controllers are paired, enabling effective communication upon connecting the RJ45 Ethernet cable between them. To perform this procedure, it is necessary to verify that the Wallpack controller has the IP address shown in the diagram (See Figure 16).

Figure 16. IP address configuration of the LIOB-585 controller.

⚠ WARNING ⚠

For customized IP adress, set desired configuration on advanced options menu,this configuration will have to be performed by a qualified person, since the different IP addresses will cause the loss of communication between the controllers and therefore the MODBUS communication.

To configure or edit the IP address on the controller:

1. Access the configuration menu.
2. Select the device management menu (See Figure 17).
3. Choose the TCP/IP configuration menu (See Figure 18).

Figure 17. Device settings.

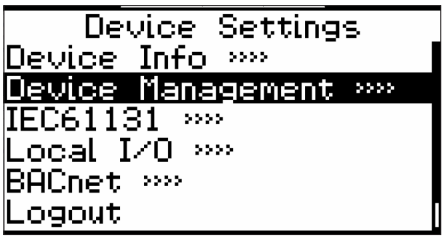

4. Select the Ethernet menu (See Figure 19).

Figure 18. TCP/IP configuration option.

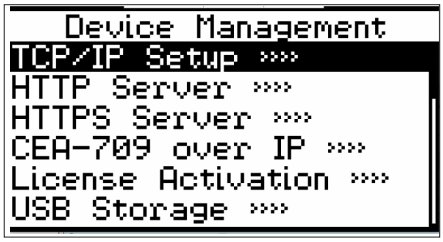

5. Upon selecting the previous menu, you will enter the device's IP configuration. Follow procedure to modify IP address and confirm (Figure 20):

Figure 19. Ethernet option

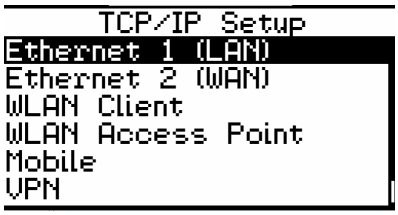

Figure 20. Ethernet 1 (LAN) configuration.

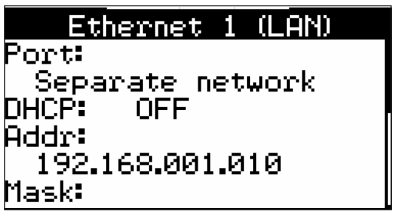

Ethernet Configuration Menu

Port: This parameter indicates the selection of the operating mode for the two Ethernet ports of the device. When this parameter is chosen, you can opt for single-port operation or for the simultaneous operation of both Ethernet ports.

- **DHCP:** This parameter functions to select whether the device can acquire an address through a server or, in this case, use a fixed address.

⚠ WARNING ⚠

If a DHCP IP address is required, reconfiguration of the device and the necessary permissions from the network administrator will be required.

- **Addr (Address):** This parameter allows for the change of the network address if the DHCP option has been selected in OFF mode; otherwise, this option will not be available to modify this parameter.
- **Mask (Subnet Mask):** This parameter allows for the selection of the subnet mask. However, if the DHCP option is set to OFF, this parameter will not be available for modification.
- **Gtwy (Gateway**): This parameter allows you to select the network gateway. If the DHCP option is set to OFF, changing this parameter will not be available.
- **Speed & duplex:** This parameter allows you to select the network speed in MB/sec in case this value is needed to verify that communication through the local network is correct. By default, this value is set to auto-detect.

- **Remote Config:** This parameter allows for the selection of remote configuration of the device. In the event of having a VPN connection, it will allow for remote configuration of the device.
- **Save:** This parameter allows you to save the network configuration, for practical purposes, allowing IP changes without restarting the controller.
- **Save and reboot:** This parameter allows you to save the network configuration and reboot the device after the change has been made.

After completing this procedure, it can be utilized, if necessary, to configure the control pair for communication with another device.

NOTE: This procedure only applies to a Modbus solution, as the unit is factory-configured with BACnet communication.

USE WALLPACK SYSTEM

The system features a digital thermostat that can be used as a temperature sensor, by default, is configured to turn on the equipment and modify system points. The L-STAT thermostat screen (Figure 21) shows the indicators of Wallpack startup system.

Figure 21. L-STAT Thermostat.

System Start Up Selection

The Wallpack equipment application offers 3 startup modes, accessible via a digital signal from the LSTAT thermostat, a BACnet network start command, or the start button on the LSTAT thermostat.

The selection is configurable through BACnet datapoints communication settings or directly by command using the LOYTEC controller's internal variables.

System Start Up

1. Press the home icon located at the bottom of the thermostat.

2. Once the above steps have been completed, the evaporator fans will start up. During this process, the time icon shown will be displayed on the screen.

3. After the evaporator fan startup time has elapsed, the condenser fan will start up, followed by the compressor.

4. Once the system is turned on, you can observe the temperature of the room from the main screen.

5. To change the temperature set point, you need to press this icon.

6. Once the previous step is completed, the display screen will change (See Figure 22).

Figure 22. Temperature Set point screen.

7. Entering the screen labeled SPT, you can use the up and down keys to change the desired value from the LSTAT.

8. "After completing the previous steps and selecting the desired set point, if you need to return back to the main screen, press the menu button".

ALARMS

The Wallpack equipment features several protection systems designed to prevent the unit from sustaining any damage during its operation. Some of the alarms that could cause the equipment to stop operating:

High and low pressure alarm:

This alarm will be activated upon triggering the high and low pressure switches, when the "Bac_Alarm_High_And_Low_Pressure_Switch " Datapoint is active. During operation, this alarm will reset automatically and may occur multiple times, depending on the configuration specified by the "Bac_Number_Retrys" Datapoint.

Broken injection temperature probe alarm:

This alarm will be present when the injection temperature probe is defective or broken, and it will be represented through the "Bac_Alarm_Probe_Inyection_Broken" Datapoint as active.

Broken return temperature probe alarm:

This alarm will be present when the return temperature probe is defective or broken, and it will be represented through the "Bac_Alarm_Probe_Return_Broken" Datapoint as active.
When this alarm is active, the entire system will be stopped, and a WARNING icon will appear on the screen, indicating a significant alarm in the system.

Outdoor temperature probe alarm:

This alarm will be present when the ambient temperature probe is in a defective or broken state, and it will be represented through the “Bac_Alarm_Probe_Ambient_Broken” Datapoint as active. When this alarm is active, the entire system will be stopped, and a WARNING icon will appear on the screen, indicating there is a significant alarm in the system.

Thermostat Start Up Application

The Wallpack application is able to initiate locally and be commanded from the start button on the LSTAT thermostat. To select this option, activate the “Bac_Selection_ON_Thermostat” Datapoint to enable the start button on the thermostat.

The “Bac_Selection_ON_Thermostat” Datapoint will activate the thermostat button, enabling the unit to be turned on or off.

NOTE: The selection of each Datapoint must be unique. If all Datapoints are activated simultaneously, the unit can be turned on from all 3 available options, but it is preferable to leave only one option active for the proper functioning of the system.

Digital Signal Start Application

To select the activation from the digital signal, activate the “Bac_Selection_ON_Signal” Datapoint. Remote activation can be carried out from a digital signal or a dry contact or taken from the thermostat or LSTAT located at the back of the thermostat.

Once the equipment activation from the physical contact has been selected, press the EB0 and GND terminals for two seconds, the equipment will turn on or off.

Network Start Up Application

The Wallpack application is able to start directly from the network, activating the “Bac_Selection_ON_Network” Datapoint. The equipment will respond to the on or off command from directly from the BACnet network.

BACnet Network Configuration

The LOYTEC controller has several communication ports dedicated to transferring information for different platforms. However, the Wallpack fitted with LOYTEC control is exclusively dedicated to BACNET/IP communication through its Ethernet ports.

The RS485 communication port of the LOYTEC controller (See Figure 15) controller is dedicated to the communication of the LSTAT and the electronic expansion module. LOYTEC has the capability to read up to 10 additional slaves through the MODBUS network from this dedicated port.

BACNET/IP communication is carried out using an RJ45 Ethernet cable that can be connected to a LOCAL network or a DHCP network with the Internet. Through this port, different information from the controller can be obtained.

The BACNET/IP communication configuration comes pre-set as Factory Default. To reconfigure, is required personnel trained in BACNET communication or LOYTEC controller management to adjust the settings via the controller’s web portal.

Free Cooling

The system includes a free cooling mode designed to recognize when the outdoor temperature falls below the indoor temperature. In this condition, the condenser fan and compressor are automatically deactivated allowing air entry through the damper with the help of the evaporator fan. When this mode is activated, the display will change to green and show the icon of figure 23.

Figure 23. Free cooling icon.

The Wallpack unit equipped with Loytec features various types of alarms designed to prevent equipment damage and provide protection. It's important to understand that tampering with or bypassing any of these alarms could lead to the equipment operating without adequate protection, potentially resulting in permanent failures.

The unit can be equipped with a thermostat that serves as a simple display, enabling users to control or manage the thermostat while providing basic and easily understandable information, such as icons and alarms.

NOTE: The thermostat is not factory default equipment; it is only installed if requested by the customer.

The Loytec thermostat can control the equipment's start and stop functions. In the event of an alarm, the display will show an alarm icon along with a brief description of the fault, accompanied by a code, as depicted in figure 24.

Figure 24. Main screen display.

NOTE: This is a descriptive image of generic thermostat, and the interface may vary depending on the product model.

Figure 25. Example of error code F-30.

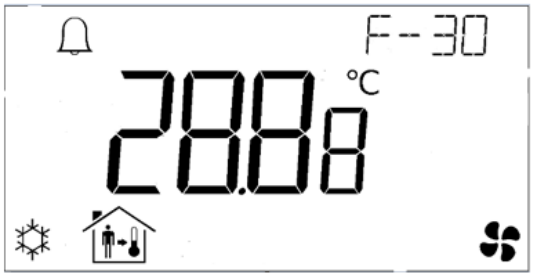

Table 6. Troubleshooting chart.

CODE	NAME	DESCRIPTION	POSSIBLE SOLUTIONS
F-25	High Pressure and Low Pressure Alarm	This alarm will be present when any of the high and low pressure switches are active.	Verify that the high and low pressure signals are electrically wired.
			Check continuity of the signals electrically and verify false contacts.
			Verify pressures with pressure gauges and check pressures according to data sheet.
			Verify that the condenser fan rotates freely.
			Check condenser COIL cleanliness.
			Verify that the evaporator fan rotates freely.
			Verify that the COIL has no obstructions or air pressure drops (verify duct installation in manual or data sheet).
F-30	High pressure transducer out-of-range alarm	This alarm will be present when the high pressure transducer is out of range or disconnected from the LOYTEC controller.	Verify that the transducer is electrically connected.
			Check the high pressure connection port with analog pressure gauges once the proper port pressure is verified replace the high pressure transducer in case of failure
F-27	Injection temperature alarm broken or disconnected	This alarm will be present when the injection temperature probe is broken or disconnected from the LOYTEC controller.	Verify that the probe cable is in good condition.
			Check that the connection terminals to the LOYTEC controller are in good condition and are correctly connected.
F-28	Return temperature alarm broken or disconnected	This alarm will be present when the return temperature probe is broken or disconnected from the LOYTEC controller.	Verify that the probe cable is in good condition.
			Check that the connection terminals to the LOYTEC controller are in good condition and correctly connected.
F-29	Broken or disconnected outdoor temperature alarm	This alarm will be present when the outdoor temperature probe is broken or disconnected from the LOYTEC controller.	Verify that the probe cable is in good condition.
			Check that the connection terminals to the LOYTEC controller are in good condition and correctly connected.
F-26	Phase protector alarm	This alarm will be present when the phase protector signal is activated by the electronic device.	Verify that the 220V or 440V main power supply has the correct connection direction.
			Check that the main power terminations are correctly connected and screwed to the electrical terminals.
			Check the main power supply voltages (electrical variations with multimeter measurement).
			Check that the parameters are correctly set in the phase protector.
F-31	EVD Low suction alarm	This alarm will be displayed when the low suction temperature exceeds the threshold programmed in the EXV EVD Twin Carel.	Verify the correct connection of the low pressure transducer that is connected to the EXV Twin Carel.
			Check actual refrigeration system pressures (rule out leaks, refrigerant charge, etc.).
			Check the correct position of the suction temperature probe and its correct insulation.
			Check the low suction parameter threshold on the electronic EXV Twin Carel valve control.
F-32	EVD SUPERHEAT Low Alarm	This alarm will be displayed when the SUPERHEAR temperature exceeds the threshold programmed in the EXV EVD Twin Carel device.	Check the correct connection of the temperature probe connected to the EXV Twin Carel.
			Check the correct position of the suction temperature probe and its correct insulation.
			Check the low suction parameter threshold on the EXV Twin Carel electronic valve controller.
F-33	EVD LOP Alarma	This alarm will be displayed when the minimum evaporation saturation temperature threshold is exceeded in the EXV EVD Twin Carel.	Verify the threshold of parameter LOP on the EXV Twin Carel electronic valve controller.
F-34	EVD MOP Alarm	This alarm will be displayed when the maximum evaporation saturation temperature threshold is exceeded in the EXV EVD Twin Carel.	Verify the threshold of the MOP parameter in the EXV Twin Carel electronic valve controller.

The Wallpack unit features electronic valve control, enabling refrigerant control during equipment operation. This valve communicates via Modbus (See Figure 26).

Figure 26. Communication .

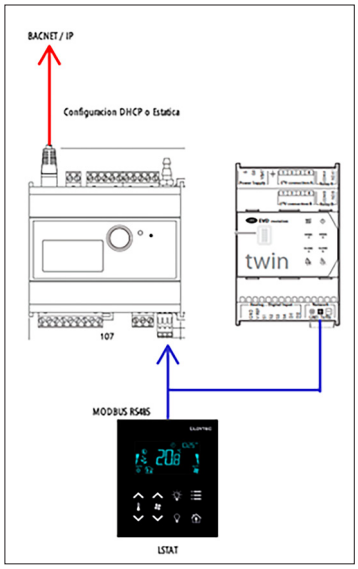

The valve serves to ensure correct refrigerant flow and protect the compressor. This electronic valve module communicates with the LOYTEC controller and shares information via Modbus to monitor temperature status and valve operation.

The Carel EXV Twin electronic valve is factory-configured with address number 2 for Modbus communication. In case of module replacement for maintenance or if the valve is not configured, communication can be established through the LOYTEC control portal. This setup verifies the valve is communicating correctly with the LOYTEC control and enables diagnostics of valve operation.

Setting to EXV Twin Carel from LOYTEC Portal

Prior to configuring the controller, it is essential to ensure correct wiring, as any wiring or hardware issues could prevent the controller from recognizing the valve.

1. Configure the IP address of the controller to be able to access the control configuration through a web browser. When accessing directly to the LOYTEC controller configuration through the IP address (this configuration may vary depending on the desired settings from the TCP/IP configuration) you must observe that two devices are enabled in the RS-485 menu (See Figure 26).

Figure 27. Device Information .

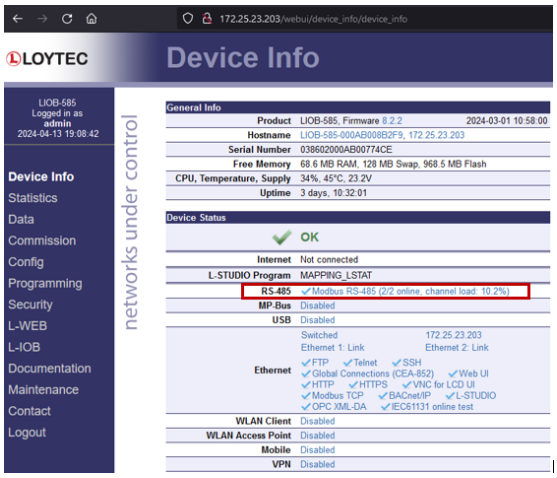

If the two RS-485 devices are not present, proceed to configure the EXV Twin Carel device. To configure, click on the RS-485 menu (refer to figure 27). Subsequently, a new menu will appear.

Figure 28 displays the presence of an EVD_TWIN device, currently in “uncommissioned mode,” indicating it’s offline and requires an assigned address. The EXV Twin Carel device is pre-programmed with the second address by default, so input the number 2 for the device. Upon completion of this procedure, the EVD_TWIN device will be online and operational, as shown in Figure 27.

Figure 28. Programming.

Figure 29. Modbus Commission.

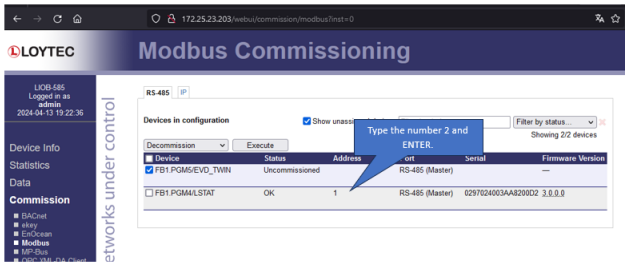

SWITCHING FROM ONE DRIVE TO ANOTHER

Figure 30. Drive.

Procedure

1. Press the Help and Enter keys simultaneously. Forced switching during parameter programming leads to displaying the parameters of driver A and driver B on the same screen (See Figure 31).

Figure 31. Configure display.

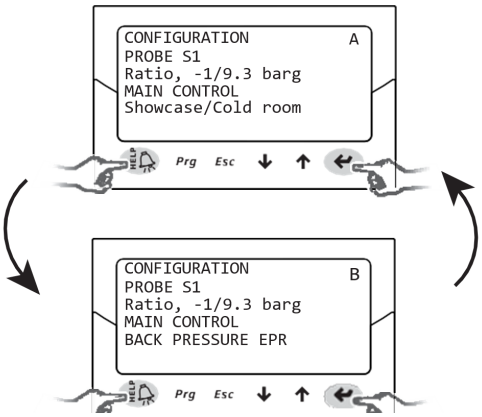

NOTE: The S1 probe parameter is common to both drivers, the main control parameter is set for each driver.

Display Mode

The Display mode shows the variables useful to know the system operation, depending on the type of control chosen.

1. To switch to the standard display, press the Escape (Esc) key once or repeatedly.
2. Choose either driver A or B to display the variables associated with it.
3. Press UP/DOWN: the display shows a graph of the superheat variables, the valve opening percentage, the evaporating temperature and pressure and the suction temperature. The display variables appear and in the queue the displays of the electrical connections of the probes and valve motors.
4. Press Esc to exit the Display mode.

Network Address

The network address assigns the controller an address for serial connection to a supervisory system via RS485 and to a pCO controller via pLAN, tLAN, Modbus. It is a common parameter for both driver A and B (See Table 7).

Table 7. Network address parameters.

Parameter/description	Predet.	Min	Max	UM
Configuration				
Network address	198	1	207	-

For RS485/Modbus models, it's necessary to set the communication speed in bits per second using the "Network settings" parameter.

Refrigerant

The type of refrigerant is essential for the calculation of superheat. It is also used to calculate the evaporating and condensing temperature from the pressure probe measurement (See Table 8).

Table 8. Refrigerant parameters.

Parameter/description	Predet.
Configuration	
Refrigerant	**R404A**

Valve

When setting the valve type, all control parameters are automatically defined based on the construction data of each model. In manufacturer programming mode, is possible to fully customize the control parameters in case the valve used is not present in the predefined list. By this selection, the controller will indicate the modification by marking the valve type as "Customized" (See Table 9).

Table 9. Valve parameters.

Parameter/description	Predet.
Configuration	
Valve:	CAREL
1= CAREL ExV;	EXV

NOTES:

- **When connecting two CAREL ExV valves to the same terminal for parallel or complementary operation, select the configuration suitable for two CAREL ExV valves.**
- **Regulation is only possible with CAREL ExV valves.**
- **Not all CAREL valves can be connected, please ensure CAREL valves compatibility before configuration.**

Pressure Probe S1 and S2

To define the measuring range and alarm range for driver A and driver B, set the type of pressure probe as S1 for driver A and S2 for driver B. These ranges are determined based on the construction data of each model, typically specified on the card located within the probe (See Table 10).

Table 10. Pressure probe parameters.

Parameter	Description
S1	NTC temperature sensor
S2	Suction pressure transducer from 0 to 45 bar

NOTE: If two pressure probes S1 and S2 are installed, they must be of the same type. It is not possible to use one proportional and one electronic probe.

NOTE: For ducted systems where the same pressure probe is shared between twin1 and twin2 controllers, select the "normal" option for driver A of the twin1 controller, and choose the "remote" option for the other drivers.

Example Table:
If you want to use for driver A and B the same pressure probe P1, type: 4...20mA, -0,5...7 barg

Driver A of twin 1 controller	Select: 4...20mA, -0.5...7 barg
Driver B of twin 1 controller and for driver A and B of twin 2 controller	Select: 4...20mA, -0.5...7 barg

NOTES:

- **The default measurement range is always in bar gauge (barg). In the Manufacturer menu, you can customize the parameters corresponding to the measuring range and alarms if the probe used is not in the standard list. If the measuring range is modified, the driver will detect the modification and indicate the probe type S1 and S3 as "Custom".**
- **The driver software takes the unit of measurement into account. If a measuring range is selected and then the unit of measurement is changed (from bar to psi), the driver automatically updates the measuring range limits and alarm limits. By default, the main control probes S2 and S4 are set to "NTC CAREL". Other probe types can be selected in the service menu.**

Main Control

When configuring the primary control, the operational mode of each driver is established. This includes setting the superheat set point, configuring PID control parameters, defining protector operations, and specifying the functions of probes S1/S3 and S2/S4. These settings are automatically adjusted to CAREL's recommended values based on the chosen application.

During the initial setup phase, only superheat control modes 1 to 10 are available, each tailored to different applications such as chillers or refrigerated counters. If any errors occur during the initial configuration, these parameters can be accessed and modified later through the service or manufacturer menu. Resetting the default controller parameters will prompt the guided startup procedure to appear again during the next startup (See Table 11).

Table 11. Main control parameter.

Parameter/description	Predet.
1= channeled counter/chamber	Counter/channeled camera

Checks After Initial Start Up

After the first start-up:

- Check that the valve performs a complete closing cycle for alignment.
- If required, adjust the overheating set point (if deviating from the CAREL recommendation based on the application) and the protection thresholds (LOP, MOP, etc.) in the Assistance or Manufacturer programming mode.

Steps For Parameter Setting And Setpoint Superheat

1. From display programming mode section, enter the regulation menu (Figure 32).

Figure 32. Programming mode display.

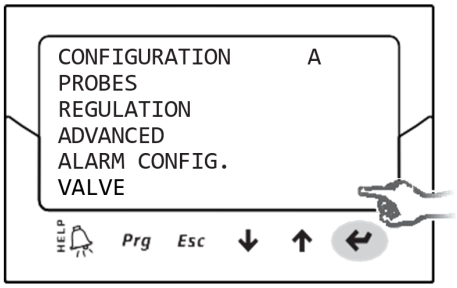

2. By pressing the **down** key, scroll the regulation menu to number 1. Press **enter** and use the **up** and **down** keys to select the desired super heat setpoint, then press the **enter** key and then the **esc** key to return to the menu selection (Figure 33).

Figure 33. Superheat set point.

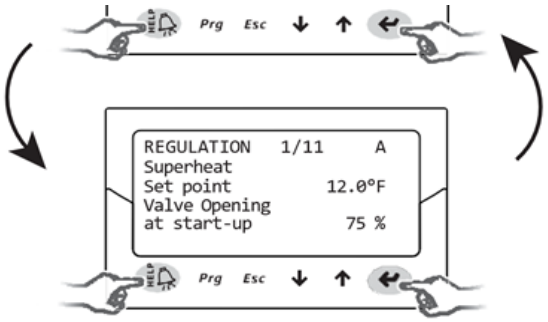

3. By pressing the down key, scroll the adjustment menu to number 5. Press enter and use the up and down keys to verify that these parameters are correct (Figure 34).

Figure 34. Superheat adjustment.

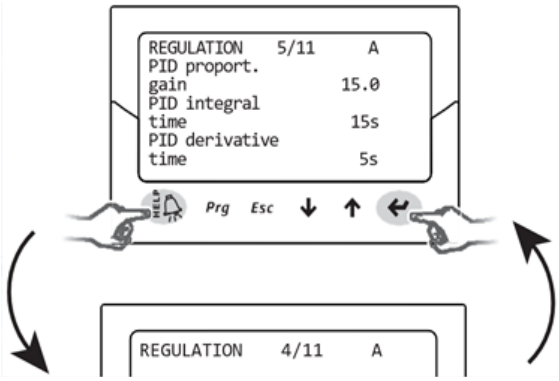

⚠ WARNING ⚠

These parameters must be adjusted exclusively by a qualified professional.

4. By pressing the up or down key, scroll the regulation menu to number 4. In case you need to adjust the measurements or tests for the electronic valve, from this menu you can select the desired opening for the valve (Figure 35).

Figure 35. Adjustment screen.

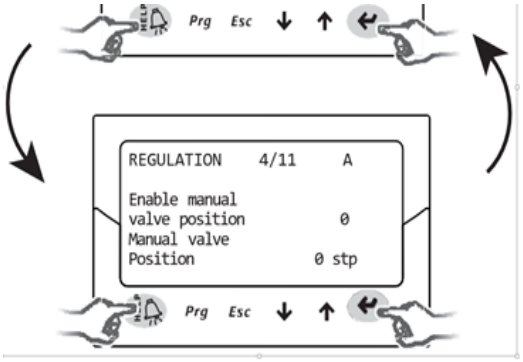

⚠ WARNING ⚠

These parameters must be adjusted exclusively by a qualified professional.

NOTICE

IMPORTANT: THIS PRODUCT IS NOT SUPPLY BY THE MANUFACTURER, UNLESS THIS THERMOSTAT MODEL IS REQUESTED.

The electrical rating for this thermostat is 1.5 A per terminal, with a maximum total combined load of 3.0A for all terminals combined.

COMPATIBLE WITH:

• Most 24-volt heating and cooling systems

NOT COMPATIBLE WITH:

• 120/240 VAC line-voltage systems (without a transformer), or on heat pumps that have two compressor stages (Y2).

Features:

• 1 or 2-Heat / 1 or 2-Cool, 7-day programming
• Universal Compatibility for all system types
• Each day of the week can be programmed separately
• Exclusive LUX® Speed SlideTM for easy programming
• User-selectable periods per day (2 or 4)
• User-selectable programmable or non-programmable operation
• LuxLight® EL (Electro-Luminescent) lighted display
• Energy usage monitor
• Special program feature
• Programmable air filter life timer
• Programmable keypad lockout for unauthorized users
• Manual temperature hold
• Adjustable vacation hold (1 to 30 days)
• Temporary temperature override
• Adjustable temperature differential / cycle-rate
• Adjustable 2nd heat stage Offset setting
• User temperature calibration
• Adjustable heat/cool set temperature limit stops
• Smart recovery
• Dual-powered (battery and/or 24-volt system powered)
• Battery-free memory storage
• F/C temperature display
• 12/24-hour clock display
• 5/2-minute selectable time delay for equipment protection

FRONT PANEL CONTROLS

Figure 36. Thermostat control.

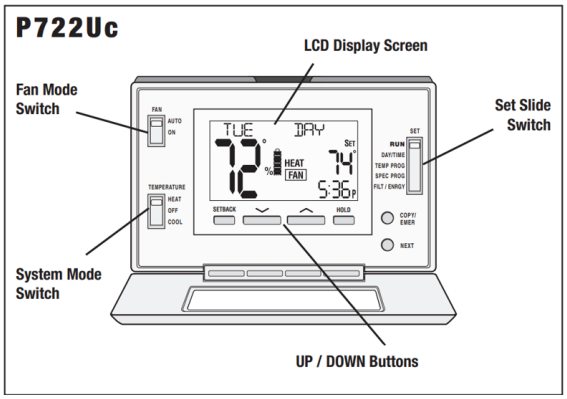

System off/cooling mode switch:

To regulate your cooling system, adjust the setting to “COOL”. To deactivate heating and cooling functions, switch it to “OFF”. (See Figure 36).

Fan mode switch, auto/on:

When the setting is switched to “AUTO,” (if the fan is available in your system), it will cycle on and off only during heating or cooling operation. When set to “ON,” the fan will run continuously (Figure 36).

Multifunction, slide switch:

Sliding switch for easy access to the operation options configuration. For normal equipment operation, the setting must remain selected to “RUN” (Figure 36).

NOTE: When the thermostat is in the non-programmable “Manual” mode, all 5 switch positions will function as RUN, except the “FILT/ENERGY” location.

Up/Down buttons:

The UP and DOWN buttons are used to control the set temperature or adjust any other item on the display (Figure 36).

Hold button:

This button activates and deactivates the manual hold temperature application, which maintains a fixed set temperature indefinitely without following a program routine (Figure 36).

Postpone button:

This button activates and deactivates the POSTPONE function, which overrides the set temperature for a modifiable duration.

For heat pump systems: this button activates the Emergency Heat mode and prevents the outdoor unit from running. For conventional systems (without heat pumps), this button will have no effect on the normal RUN mode (Figure 36).

NEXT button:

The NEXT button is used to change the settings of options such as software options and temperature programming. The modified options are identified by a flashing light

SYSTEM SETTING

Configuration options for the thermostat's operation, are made through an on-screen menu.

To enter the configuration menu:

Move the System Mode switch to the OFF position and then press and hold the EMER button for approximately 5 seconds until the display changes. The menu will always start with item #1 and advances to each of the following items with a single press of the NEXT button. The options for each item are changed using the UP and DOWN buttons.

Item #01 (Clock format):

[12 hrs, default] This displays the clock time using the standard AM and PM values.
[24 hr] This displays the clock time using the military time format (e.g. 22:00 hours, without using AM or PM).

Item #02 (Temperature scale):

[F, default] Display all temperature values in Fahrenheit. [C] Display all temperature values in Celsius.

Item #03 (Thermostat type):

[Programmable, Default] Use this setting to follow a program routine. [Manual] This setting omits the program routine and operates as a manual style non-programmable thermostat. This is very basic and only displays the room temperature and sets the temperature on the display without a clock.

Item #04 (Amount of the period):

[4P, default] The thermostat uses four periods per day, called MORN, DAY, EVE and NITE.
[2P] The thermostat uses two periods per day called DAY and NITE.

Item #05 (Early recovery):

[Off, default] Temperature schedule values begin to be presented exactly at the period start times.
[On] Early recovery affects how the transition occurs when switching from the NITE period to the MORN period and when switching from the DAY period to the EVE period. The thermostat calculates how long it takes your home to recover from a setback on a daily basis and turns on early to achieve the set goal of the next program period by the period start time. While in recovery, the word RECOV (Recovery) will appear on the display.

Item #06 (Time delay):

[5, default] The thermostat waits 5 minutes before turning the system back on after the last time it was turned off. This internal delay prevents rapid cycling and provides wallpack protection. The 5 minute setting is fine for most applications. [2] Same operation as above but decreased by 2 minutes between status changes.

Item #07 (Temperature swing adjustment):

A thermostat operates by turning the heating or cooling system on and off whenever the room temperature varies from the desired set temperature. The amount of this variation is called "swing". Use the UP/DOWN buttons to change the value of the number between 1 and 9. The system should typically run between 3 and 6 cycles per hour. A lower swing value increases the number of cycles per hour, so that the room temperature is more accurate and constant. A higher swing value causes the system to stay on for a longer duration each time and decreases the number of cycles per hour.

Configuration Day And Time

1. Adjust the Set Slide switch to the DAY/TIME position. With the day flashing, press UP or DOWN to set the day of the week.
2. Press NEXT and the clock will begin to flash. Use UP or DOWN to set the time, making sure the AM/PM indication is correct.
3. Holding down the UP or DOWN buttons will cause the clock digits to scroll rapidly.
4. Return the Set Slide switch to the RUN position when finished.

Cooling Operation

Cooling operation can be obtained by adjusting the Set Slide switch to the RUN position and selecting COOL on the system mode switch, and adjusting the temperature using the UP or DOWN buttons. When the thermostat is first turned on, it will follow a default temperature routine that is pre-set at the factory. Alternatively, you can use the HOLD button to maintain a set temperature.

Temperature Programming

To set a temperature program, choose the cooling mode.

1. Move the setting slide switch to TEMP PROG mode. The programming will start on a Monday.
2. Use the UP/DOWN buttons to modify the start time for the MORN period and then press the NEXT button to advance.
3. Use the UP/DOWN buttons to set the fixed temperature for the MORN period and press the NEXT button to advance.
4. Now modify the start period and set the temperature for the DAY period, pressing the NEXT button after each point to advance.
5. Repeat these same steps to modify the start times and temperatures for the EVE and NITE periods.

STANDAR CONTROL OPERATION

Hi Pressure Switch (HPS) - The high-pressure switch is standard in all units, and interrupts compressor operation if high side refrigerant pressures exceed switch settings. The switch is normally closed (NC) and opens during a high-pressure event.

Low Pressure Switch (LPS) - The low-pressure switch is standard in all units, and interrupts compressor operation if low side refrigerant pressures reach an extremely low level. The switch is normally closed (NC) and opens during a low-pressure event.

Phase Detector (PD) – Phase Detector control module is standard in all air conditioner units, and interrupts unit operation if a low incoming voltage event (brownout) occurs or any phase is inverted.

24V Thermostat- When the cooling mode is activated on the thermostat, all controls are checked to ensure that they are correctly activated (PD, HPC, LPC), if there is no anomaly in the operation of the controls, the fan operation is activated (evaporator and condenser) and then the compressor starts to operate. The setpoint can be adjusted with the thermostat.

Minimum Thermostat Requirements

To connect Thermostat to WP unit, the thermostat must have the following connections.

1. G Connection for Indoor Fan
2. Y Connection for Start-up of Air Conditioning (Compressor operation).
3. R Connection for System 24V Transformer
4. W Connection for Heater (Electric Heater or HP)
5. C System Common(Optional)

Figure 37. Thermostat Connections

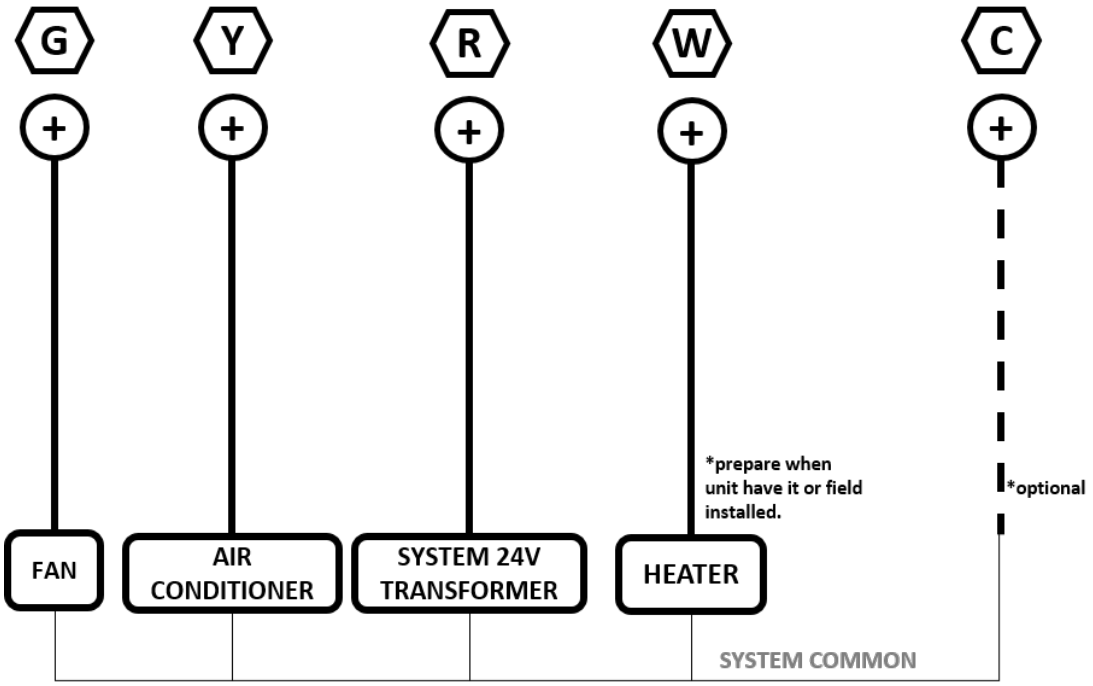

Figure 38. Control Diagram Wallpack 3 and 5 RT 208-230/1/60

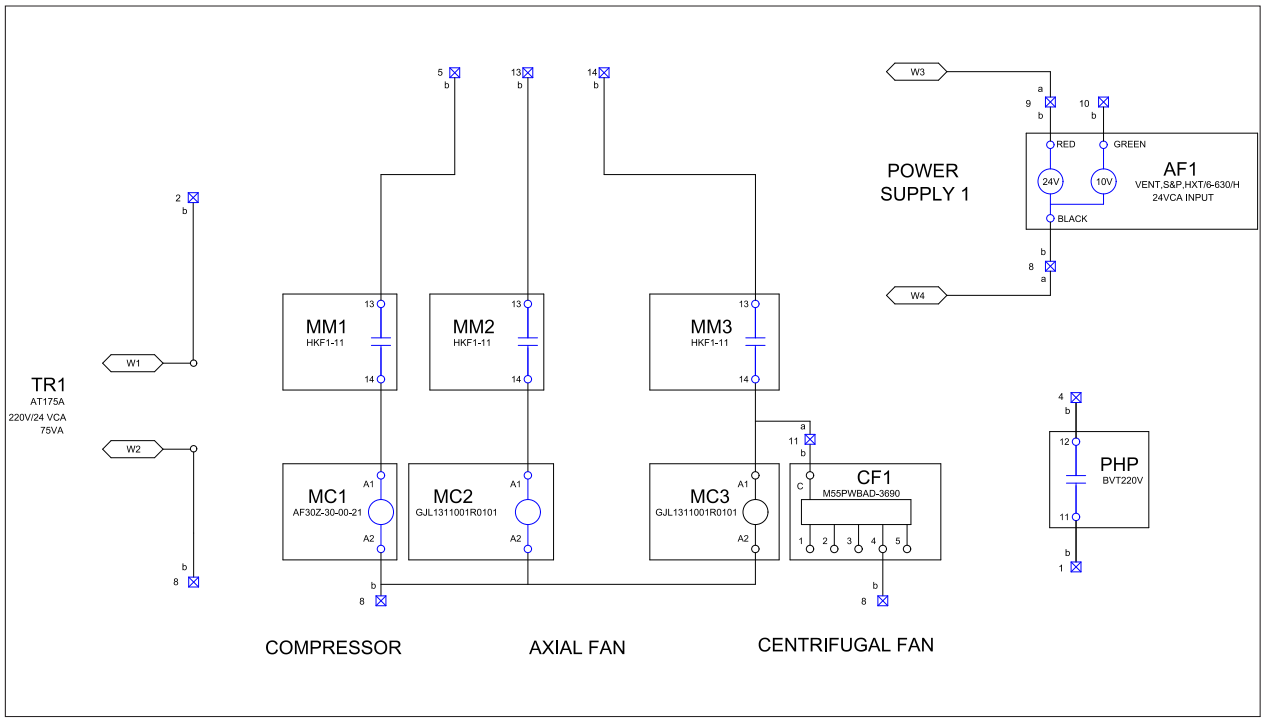

Figure 39. EVD Diagram Wallpack 3 and 5 RT 208-230/1/60

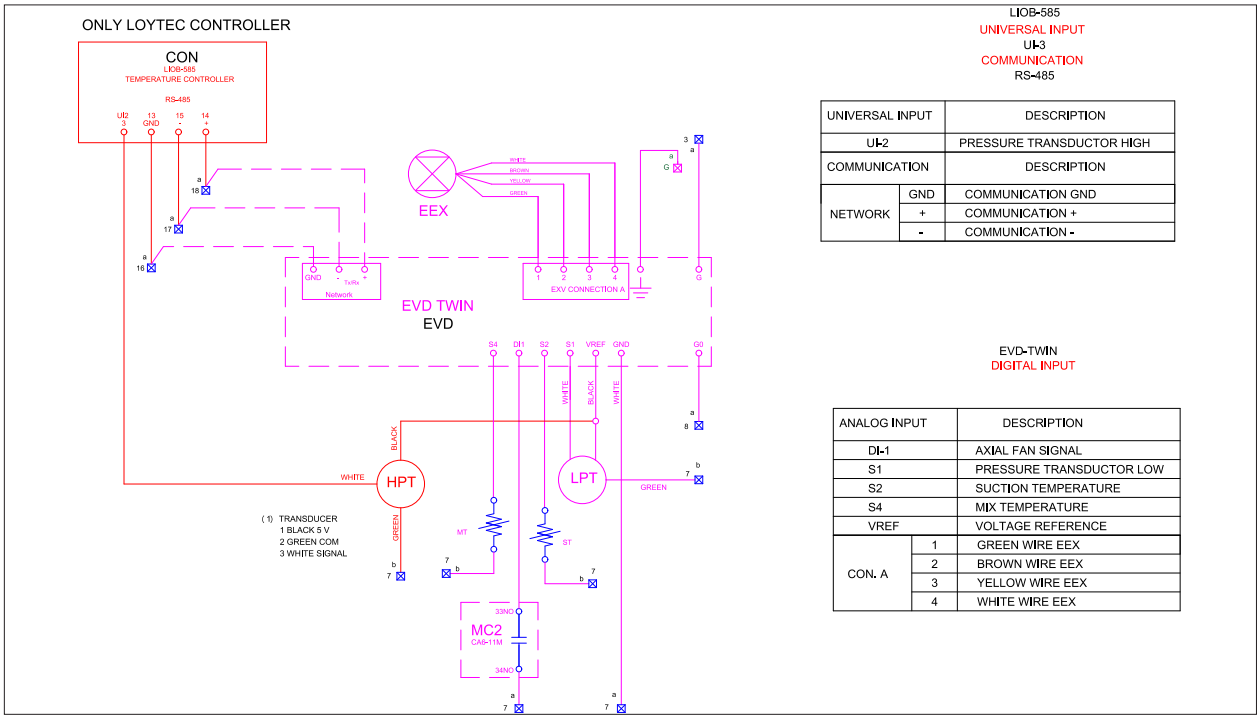

UNIVERSAL INPUT		DESCRIPTION
UI-2		PRESSURE TRANSDUCTOR HIGH
COMMUNICATION		DESCRIPTION
NETWORK	GND	COMMUNICATION GND
	+	COMMUNICATION +
	-	COMMUNICATION -

ANALOG INPUT		DESCRIPTION
DI-1		AXIAL FAN SIGNAL
S1		PRESSURE TRANSDUCTOR LOW
S2		SUCTION TEMPERATURE
S4		MIX TEMPERATURE
VREF		VOLTAGE REFERENCE
CON. A	1	GREEN WIRE EEX
	2	BROWN WIRE EEX
	3	YELLOW WIRE EEX
	4	WHITE WIRE EEX

Figure 40. Thermostat Diagram Wallpack 3 and 5 RT 208-230/1/60

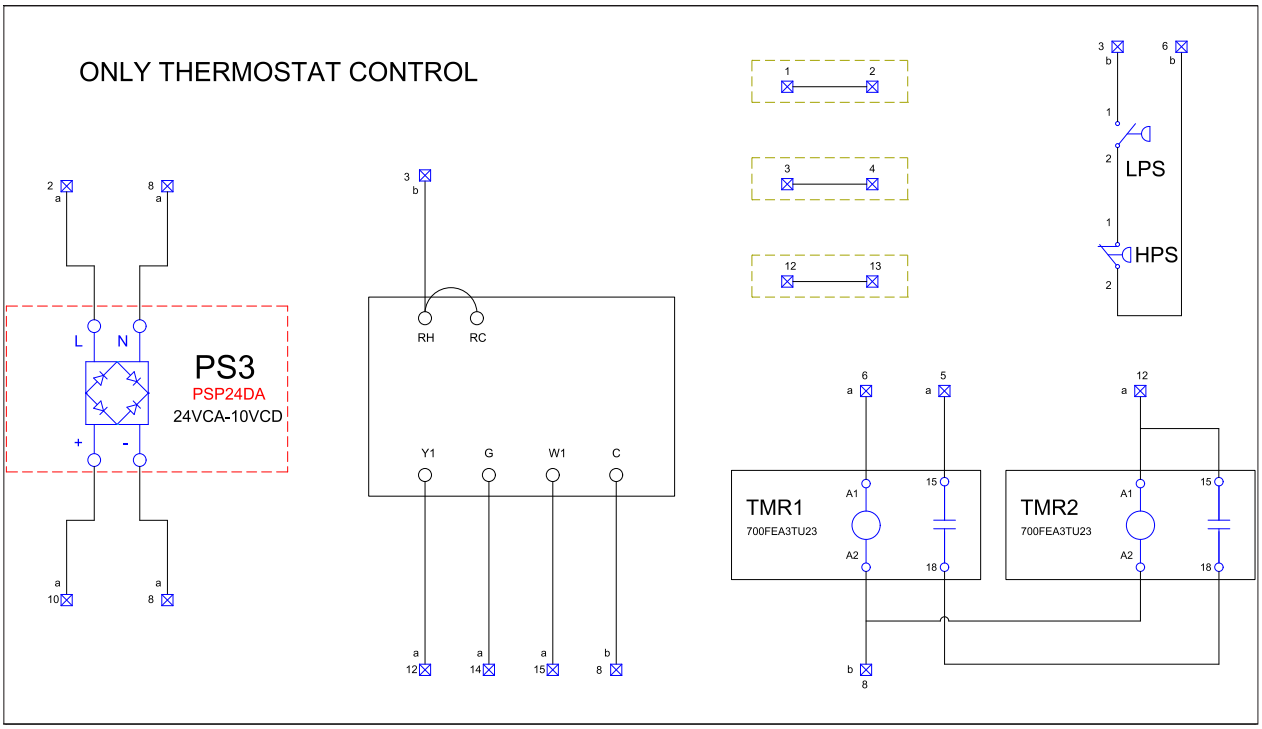

Figure 41. Loytec and Heater Control Diagram Wallpack 3 and 5 RT 208-230/1/60

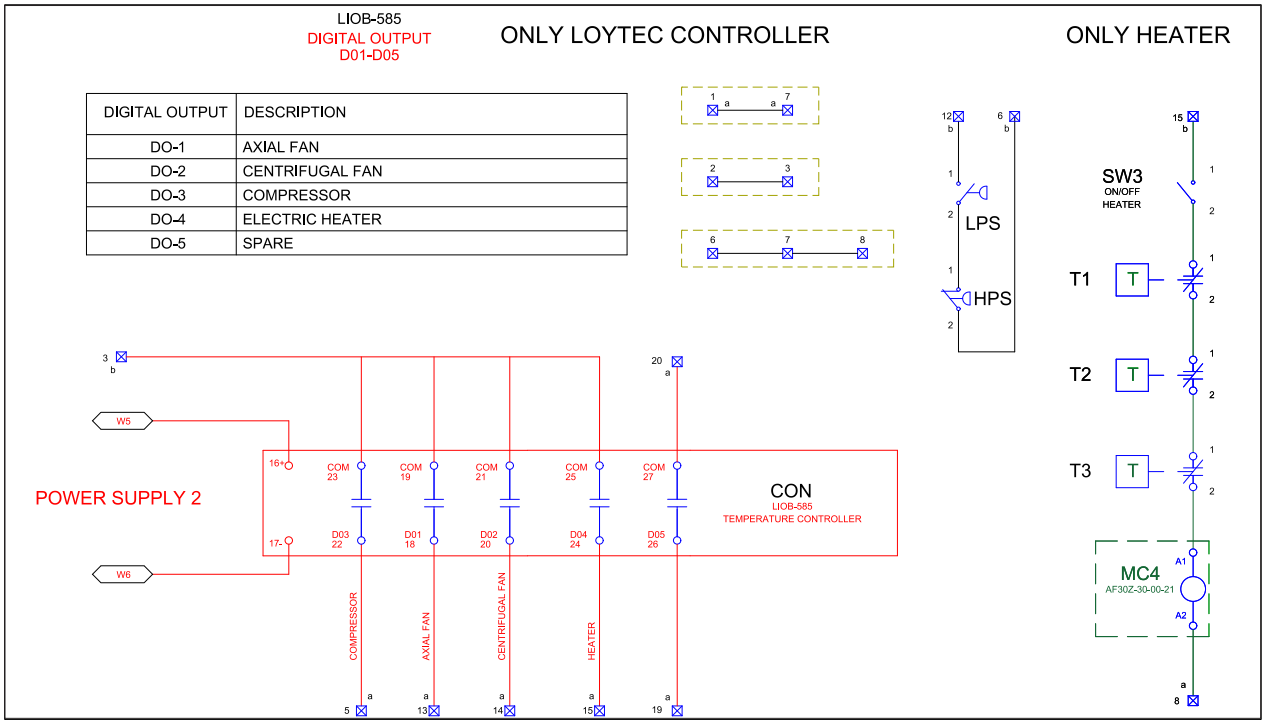

Figure 42. Loytec Control Diagram Wallpack 3 and 5 RT 208-230/1/60

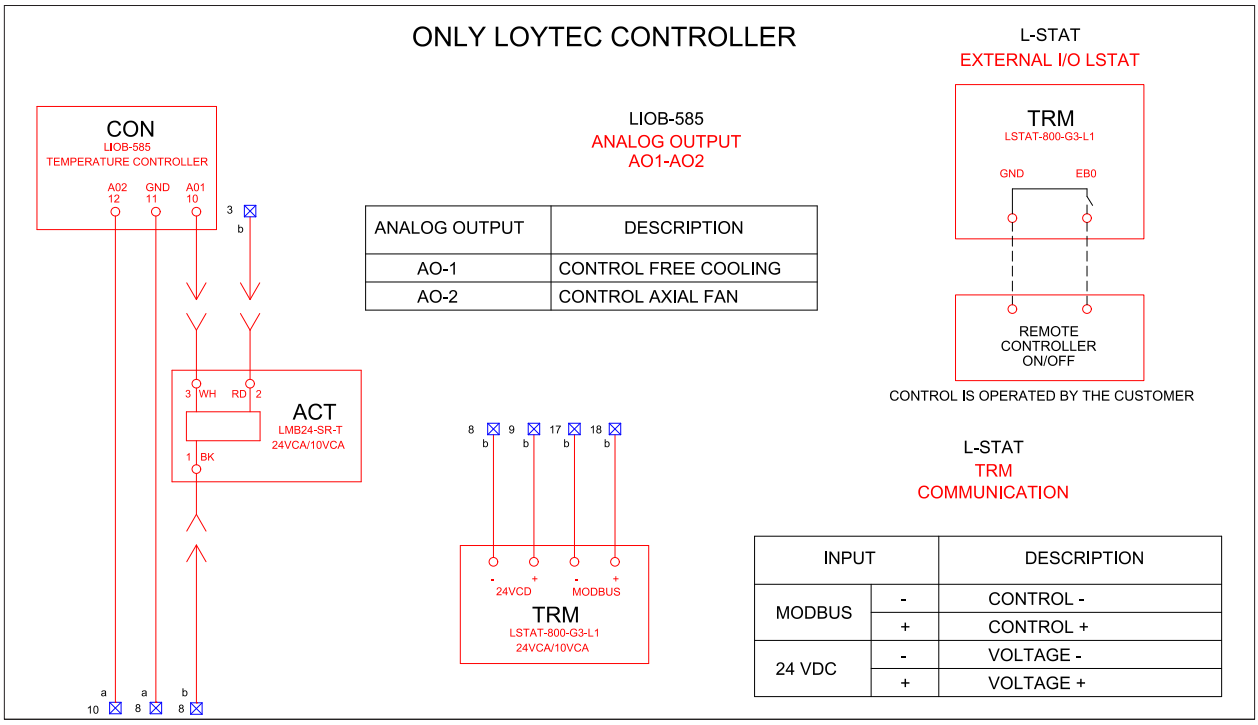

ANALOG OUTPUT	DESCRIPTION
AO-1	CONTROL FREE COOLING
AO-2	CONTROL AXIAL FAN

INPUT		DESCRIPTION
MODBUS	-	CONTROL -
	+	CONTROL +
24 VDC	-	VOLTAGE -
	+	VOLTAGE +

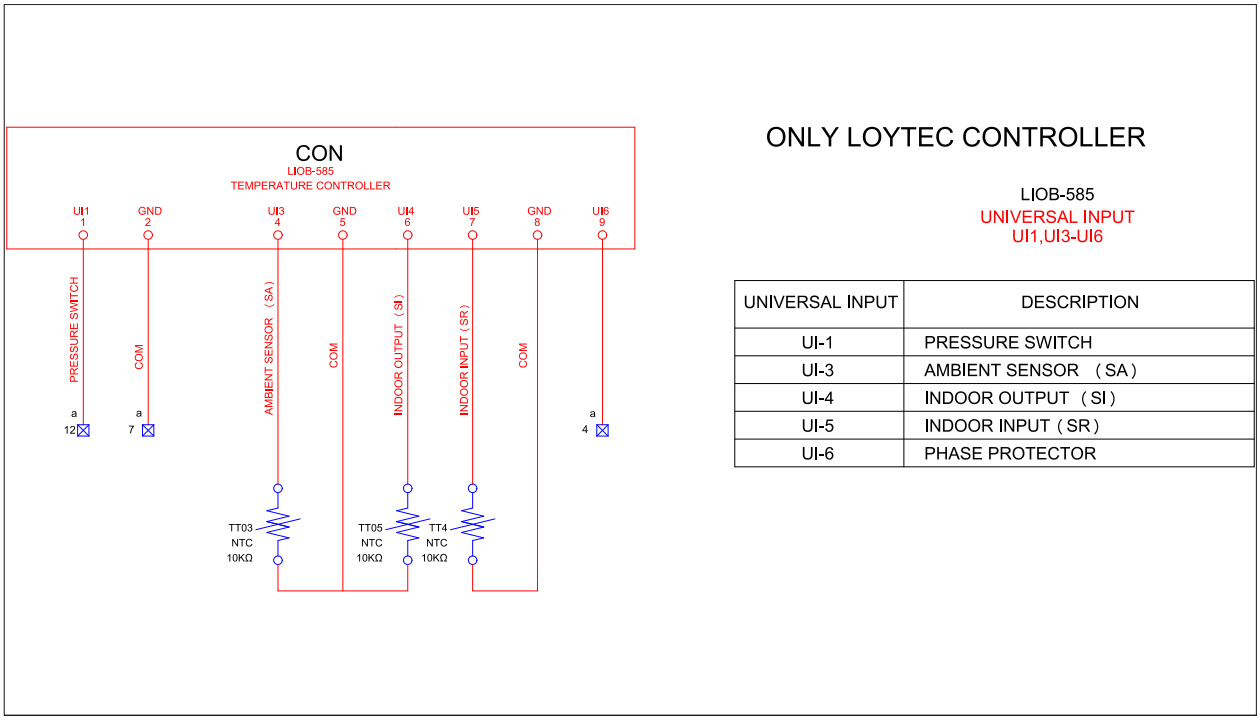

UNIVERSAL INPUT	DESCRIPTION
UI-1	PRESSURE SWITCH
UI-3	AMBIENT SENSOR (SA)
UI-4	INDOOR OUTPUT (SI)
UI-5	INDOOR INPUT (SR)
UI-6	PHASE PROTECTOR

Figure 43. Control Diagram Wallpack 3 and 5 RT 208-230/3/60

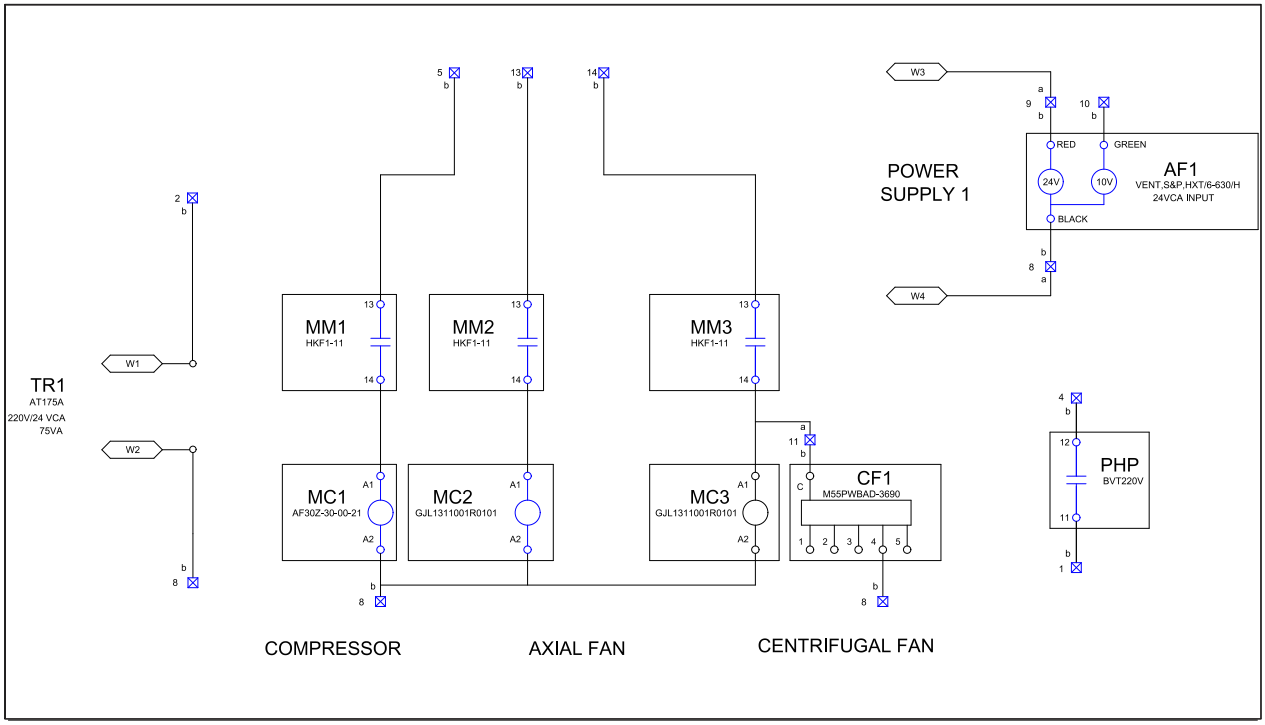

Figure 44. EVD Diagram Wallpack 3 and 5 RT 208-230/3/60

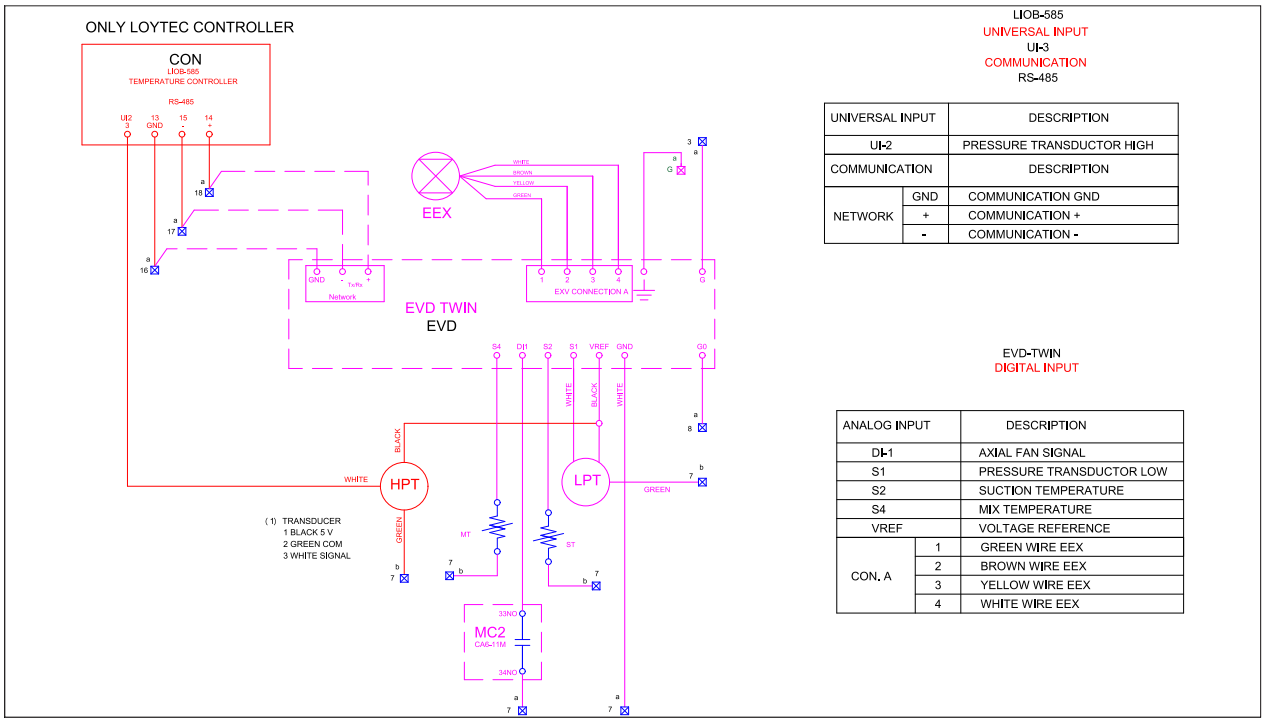

UNIVERSAL INPUT		DESCRIPTION
UI-2		PRESSURE TRANSDUCTOR HIGH
COMMUNICATION		DESCRIPTION
NETWORK	GND	COMMUNICATION GND
	+	COMMUNICATION +
	-	COMMUNICATION -

ANALOG INPUT		DESCRIPTION
DI-1		AXIAL FAN SIGNAL
S1		PRESSURE TRANSDUCTOR LOW
S2		SUCTION TEMPERATURE
S4		MIX TEMPERATURE
VREF		VOLTAGE REFERENCE
CON. A	1	GREEN WIRE EEX
	2	BROWN WIRE EEX
	3	YELLOW WIRE EEX
	4	WHITE WIRE EEX

Figure 45. Thermostat Diagram Wallpack 3 and 5 RT 208-230/3/60

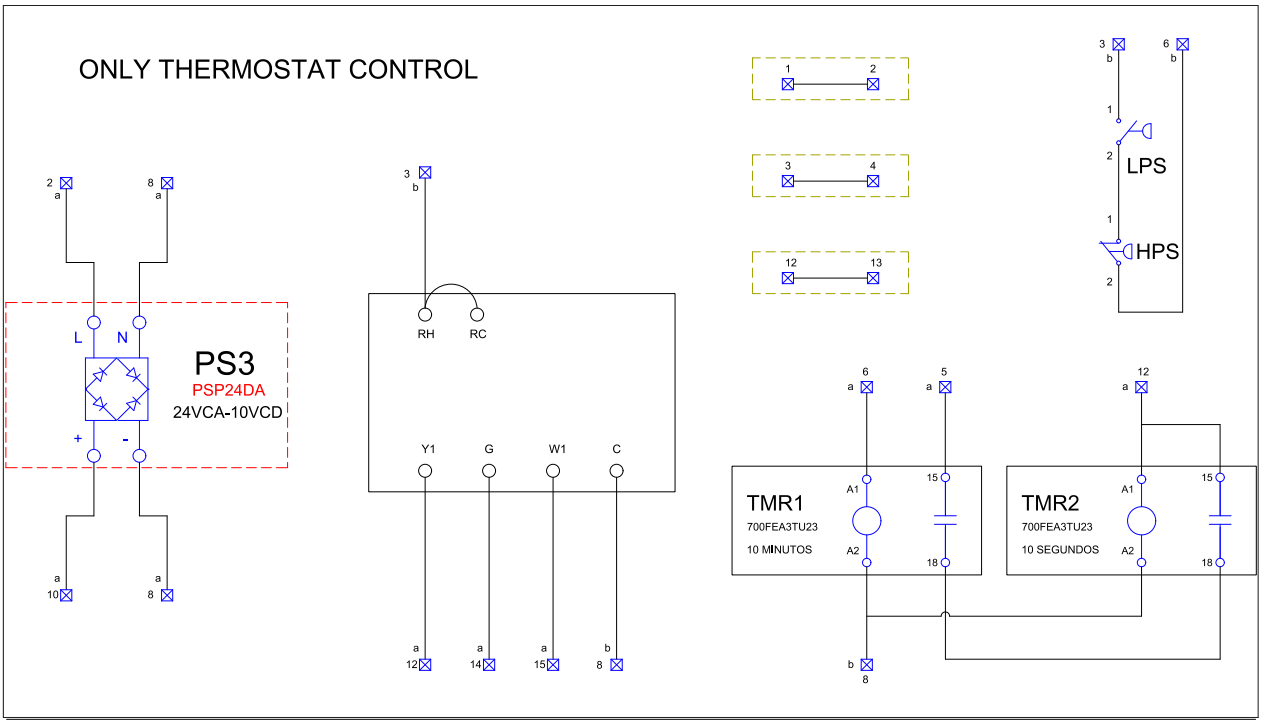

Figure 46. Loytec and Heater Control Diagram Wallpack 3 and 5 RT 208-230/3/60

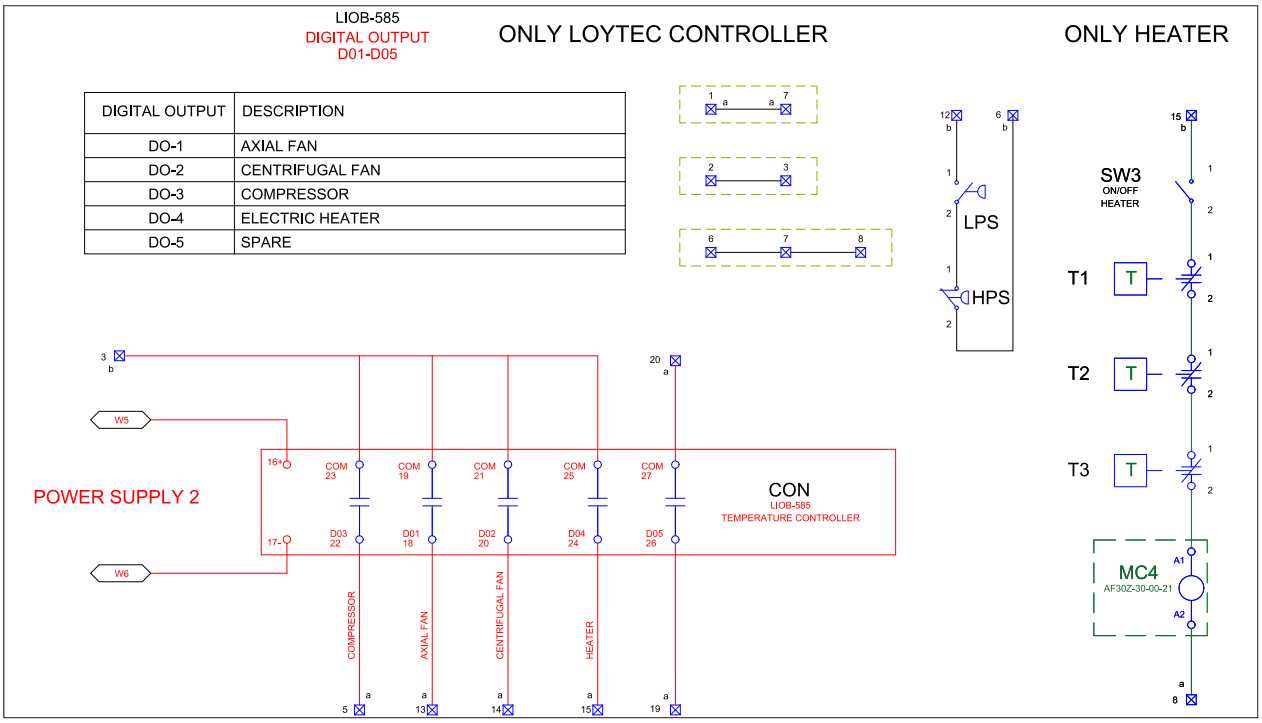

DIGITAL OUTPUT	DESCRIPTION
DO-1	AXIAL FAN
DO-2	CENTRIFUGAL FAN
DO-3	COMPRESSOR
DO-4	ELECTRIC HEATER
DO-5	SPARE

Figure 47. Loytec Control Diagram Wallpack 3 and 5 RT 208-230/3/60

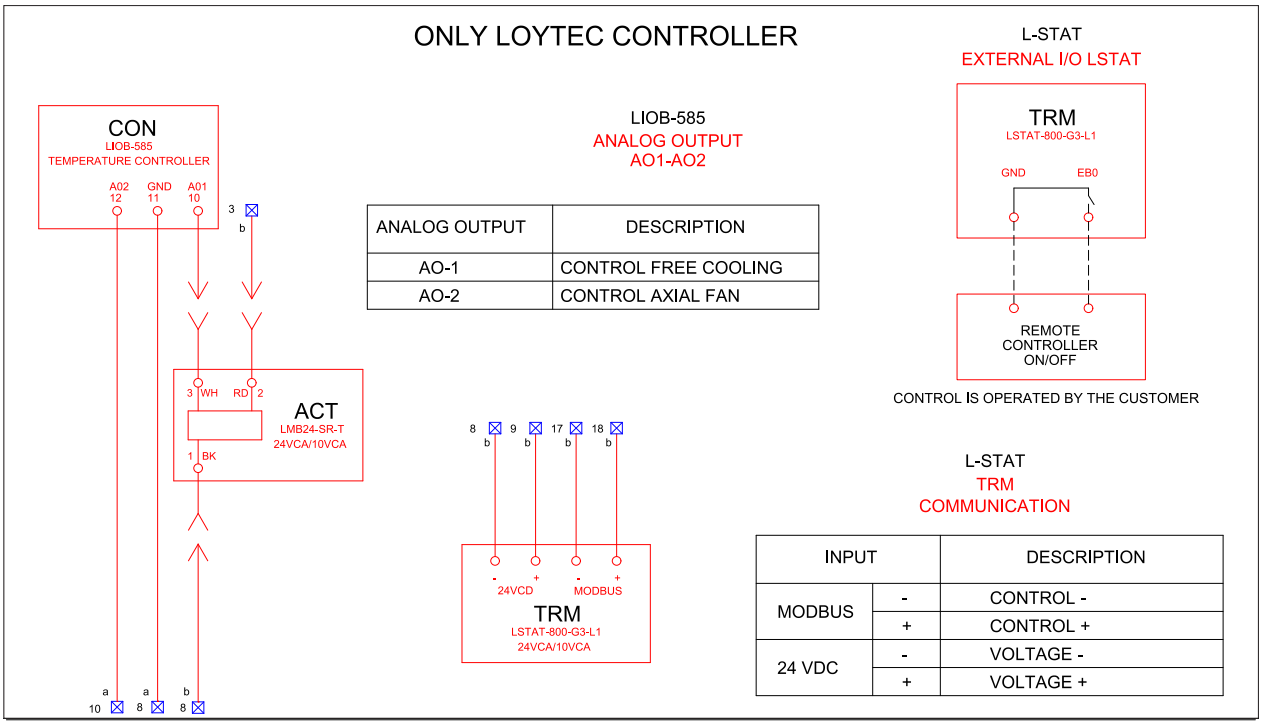

ANALOG OUTPUT	DESCRIPTION
AO-1	CONTROL FREE COOLING
AO-2	CONTROL AXIAL FAN

INPUT		DESCRIPTION
MODBUS	-	CONTROL -
	+	CONTROL +
24 VDC	-	VOLTAGE -
	+	VOLTAGE +

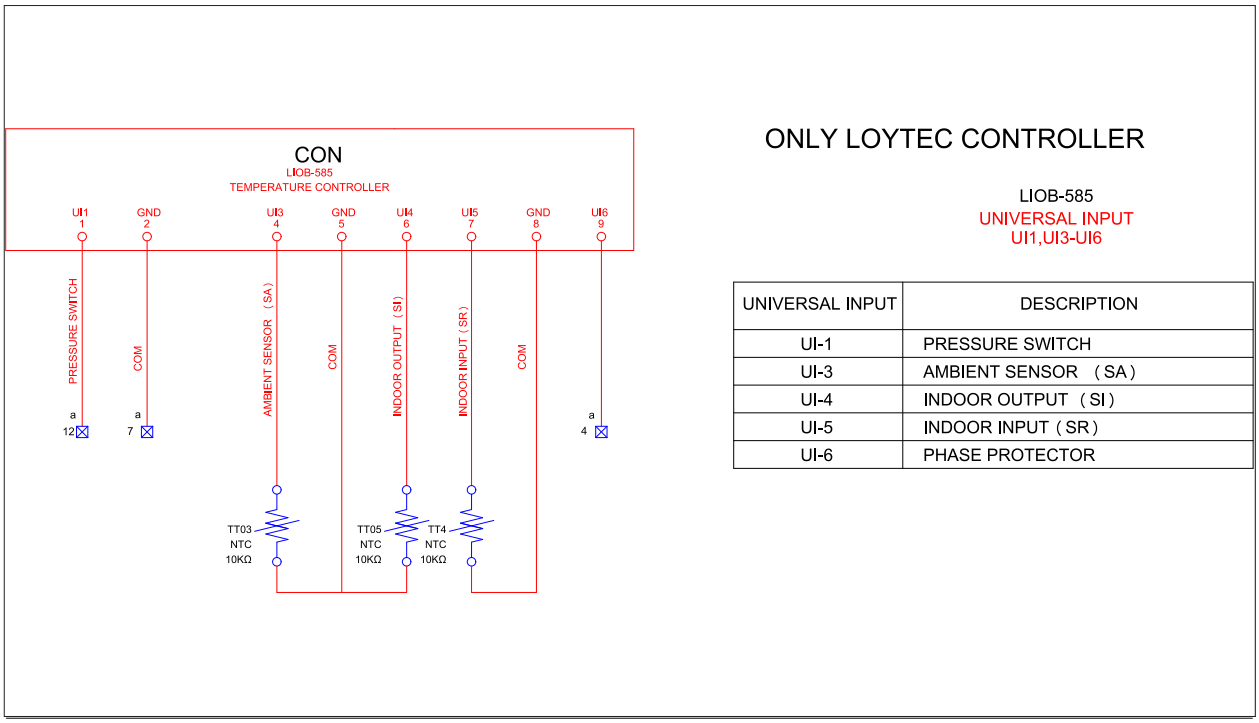

UNIVERSAL INPUT	DESCRIPTION
UI-1	PRESSURE SWITCH
UI-3	AMBIENT SENSOR (SA)
UI-4	INDOOR OUTPUT (SI)
UI-5	INDOOR INPUT (SR)
UI-6	PHASE PROTECTOR

Figure 48. Control Diagram Wallpack 3 and 5 RT 460/3/60

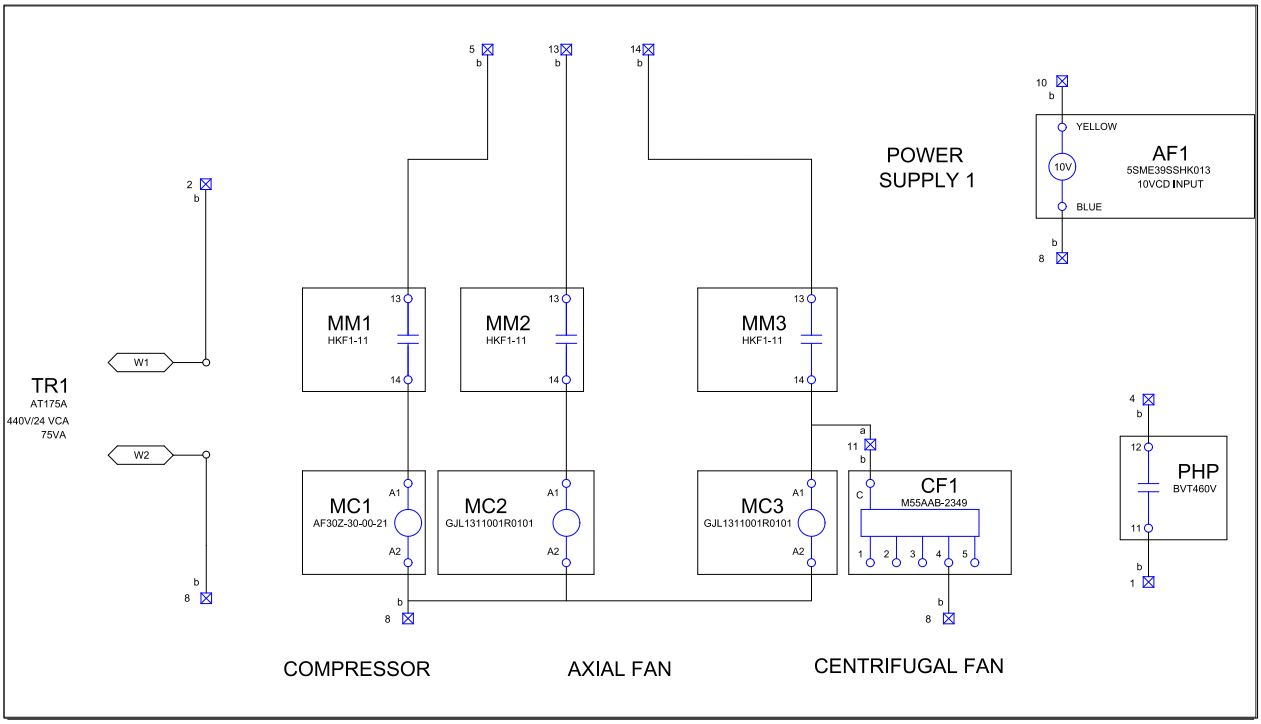

Figure 49. EVD Diagram Wallpack 3 and 5 RT 460/3/60

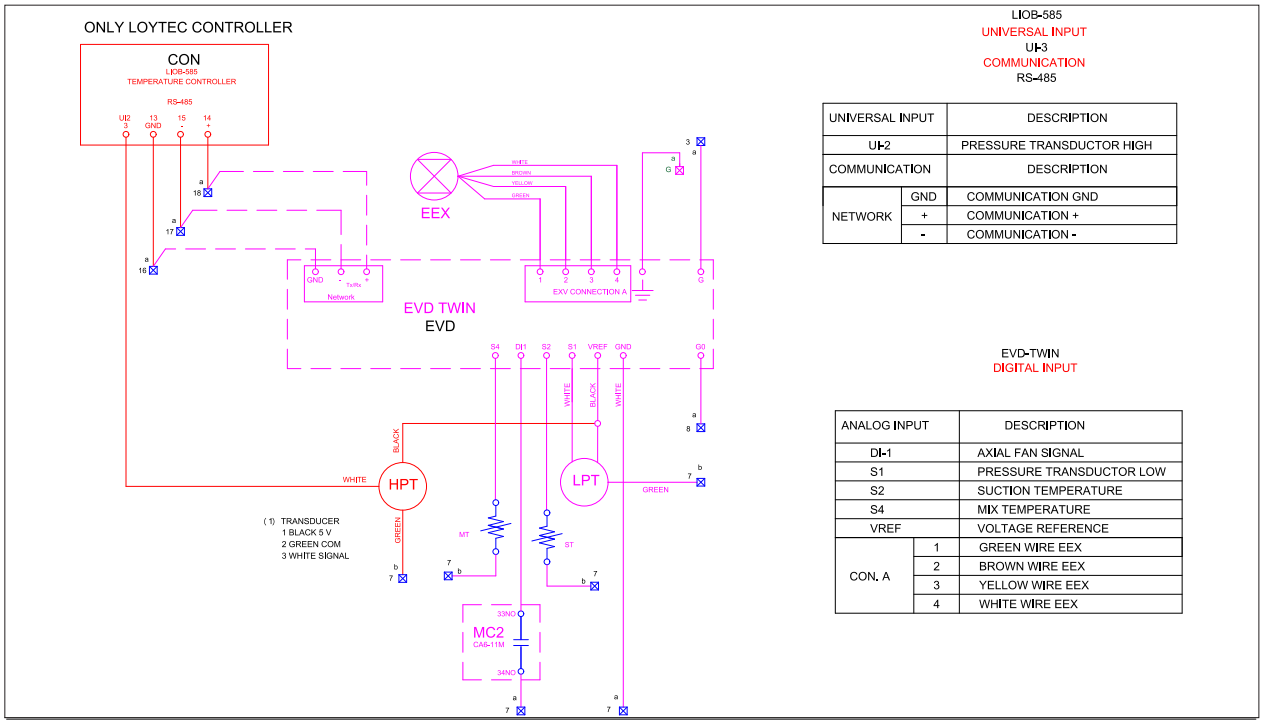

UNIVERSAL INPUT		DESCRIPTION
UI-2		PRESSURE TRANSDUCTOR HIGH
COMMUNICATION		DESCRIPTION
NETWORK	GND	COMMUNICATION GND
	+	COMMUNICATION +
	-	COMMUNICATION -

ANALOG INPUT		DESCRIPTION
DI-1		AXIAL FAN SIGNAL
S1		PRESSURE TRANSDUCTOR LOW
S2		SUCTION TEMPERATURE
S4		MIX TEMPERATURE
VREF		VOLTAGE REFERENCE
CON. A	1	GREEN WIRE EEX
	2	BROWN WIRE EEX
	3	YELLOW WIRE EEX
	4	WHITE WIRE EEX

Figure 50. Thermostat Diagram Wallpack 3 and 5 RT 460/3/60

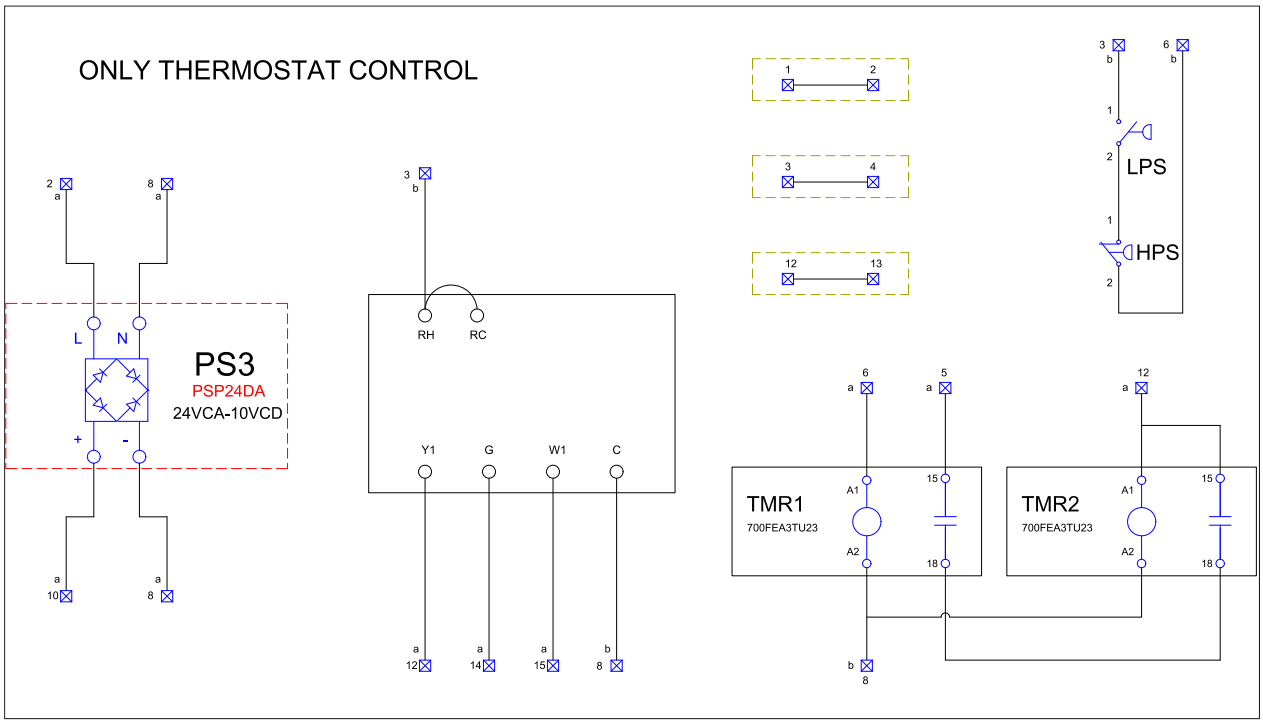

Figure 51. Loytec Diagram Wallpack 3 and 5 RT 460/3/60

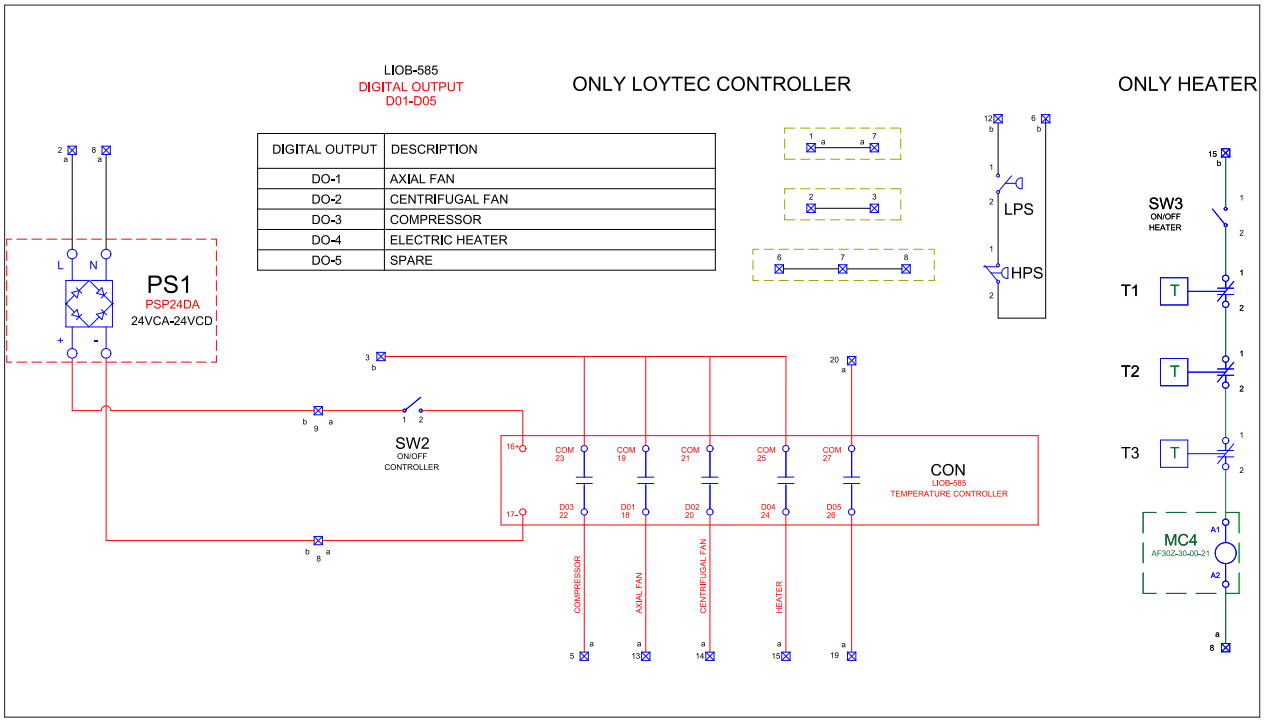

DIGITAL OUTPUT	DESCRIPTION
DO-1	AXIAL FAN
DO-2	CENTRIFUGAL FAN
DO-3	COMPRESSOR
DO-4	ELECTRIC HEATER
DO-5	SPARE

Figure 52. Loytec Control Diagram Wallpack 3 and 5 RT 460/3/60

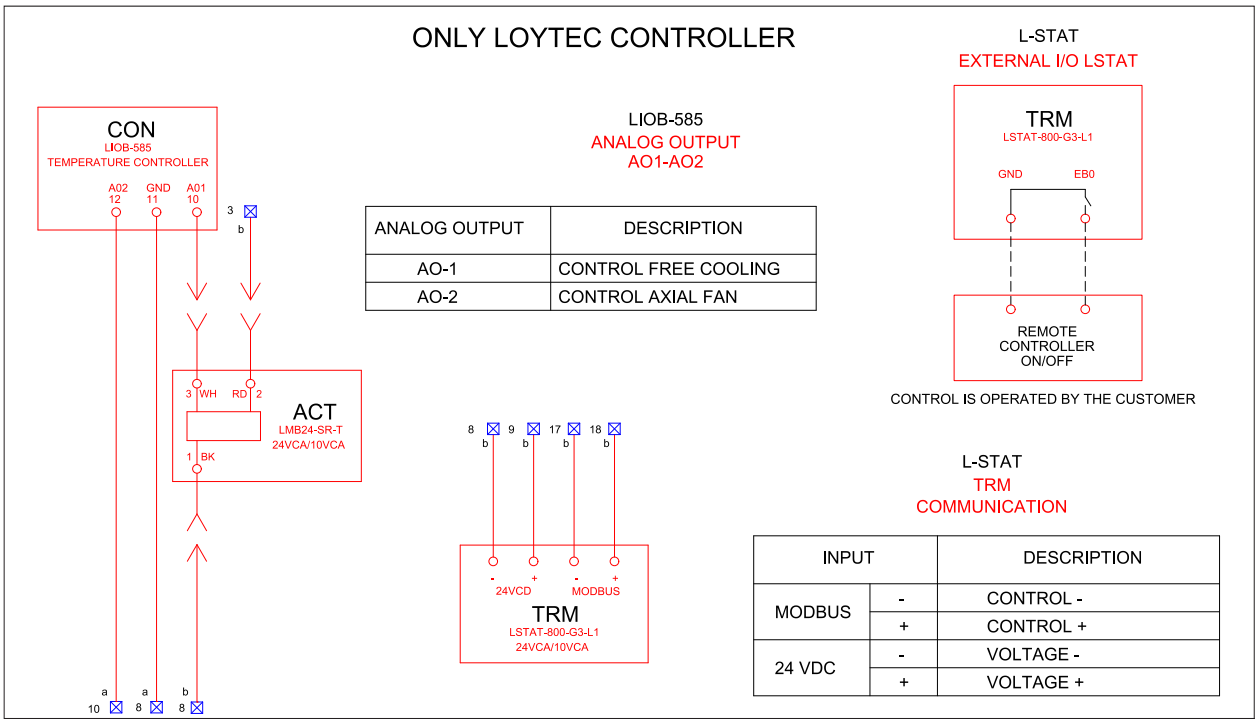

ANALOG OUTPUT	DESCRIPTION
AO-1	CONTROL FREE COOLING
AO-2	CONTROL AXIAL FAN

INPUT		DESCRIPTION
MODBUS	-	CONTROL -
	+	CONTROL +
24 VDC	-	VOLTAGE -
	+	VOLTAGE +

Figure 53. Loytec Control Diagram Wallpack 3 and 5 RT 460/3/60

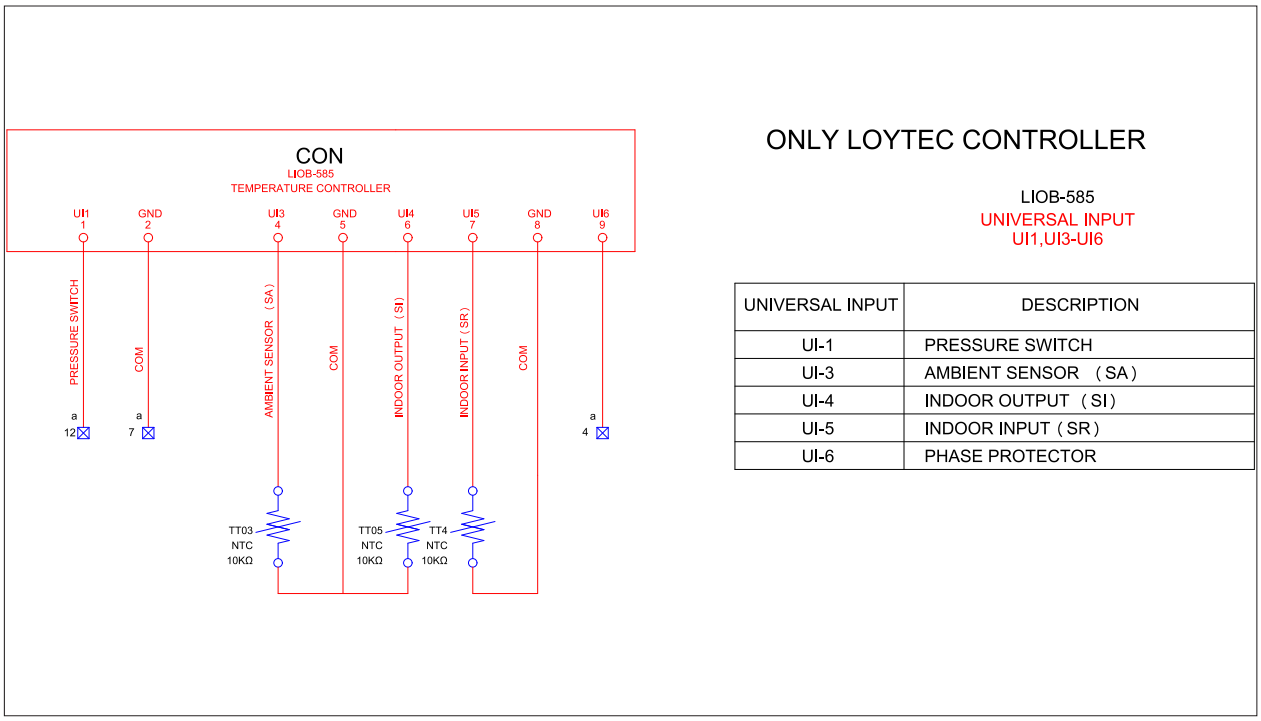

UNIVERSAL INPUT	DESCRIPTION
UI-1	PRESSURE SWITCH
UI-3	AMBIENT SENSOR (SA)
UI-4	INDOOR OUTPUT (SI)
UI-5	INDOOR INPUT (SR)
UI-6	PHASE PROTECTOR

Clima-Flex®

Air Conditioning

a member of **DAIKIN** *group*